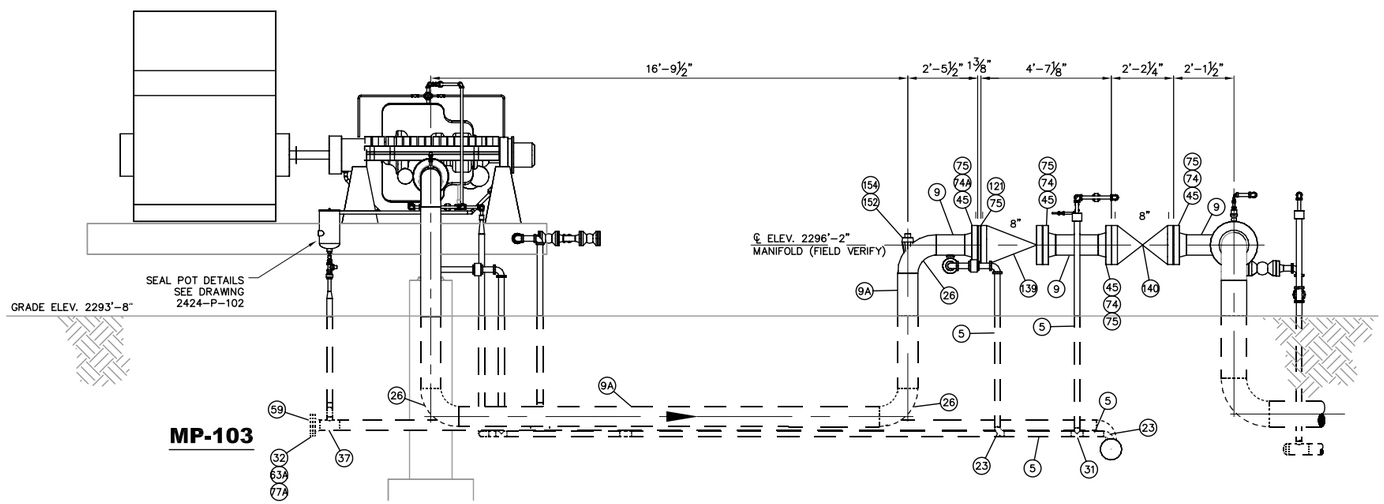


SECTION A
SCALE 3/8"=1'-0"

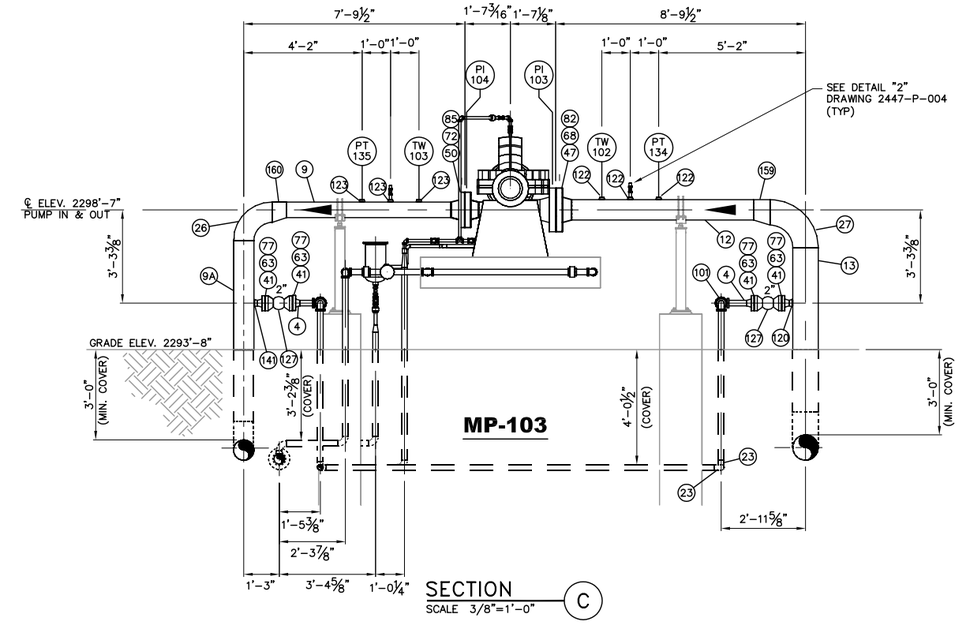


SECTION C
SCALE 3/8"=1'-0"

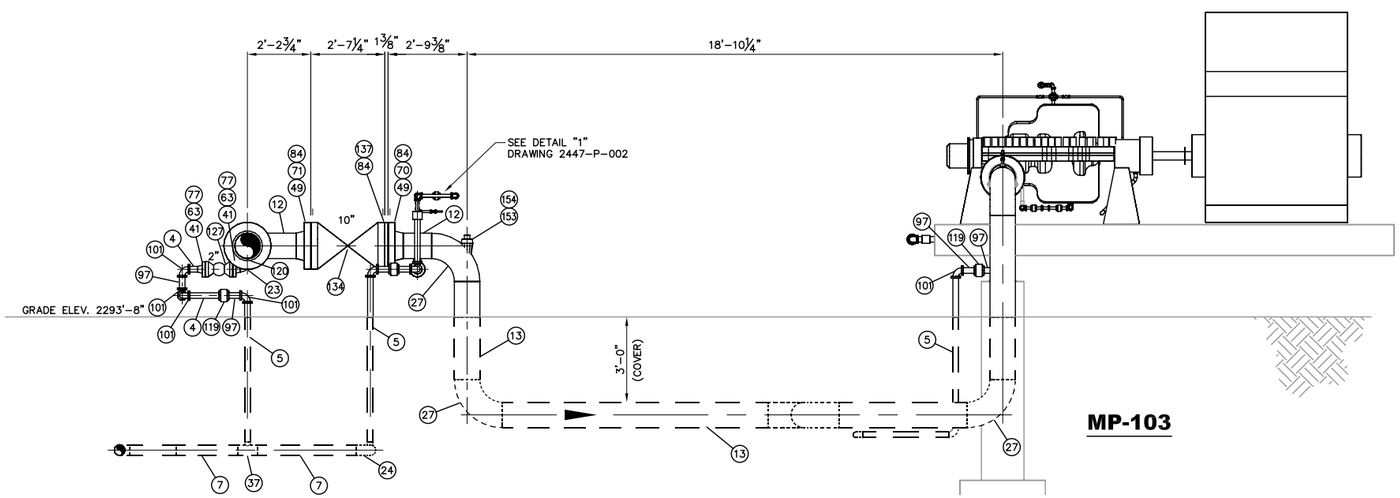


SECTION B
SCALE 3/8"=1'-0"

| NO | REVISION | DATE | APPR | BY |
|---|---|---|---|---|
| | | | | |
| | | | | |
| 1 | AS-BUILT | 2/14/08 | | ADJ |
| 0 | ISSUED FOR CONSTRUCTION | 2/23/07 | | ADJ |

ENBRIDGE PIPELINES (ND)

ALEXANDER (ND) STATION

PIPING PLAN
SECTIONS AND DETAILS
NEW MAINLINE PUMP

PROJECT:

| | | |
|---|---|---|
| SCALE: 3/8"=1'-0" | DATE: 11/21/06 | DRAWN: ADJ |
| CHECK: | APPR: | DATE: |


Rooney Engineering, Inc.
12201 E. Arapahoe Rd.
Centennial, CO 80112
(303) 792-5911


DWG. NO. 2447-P-003