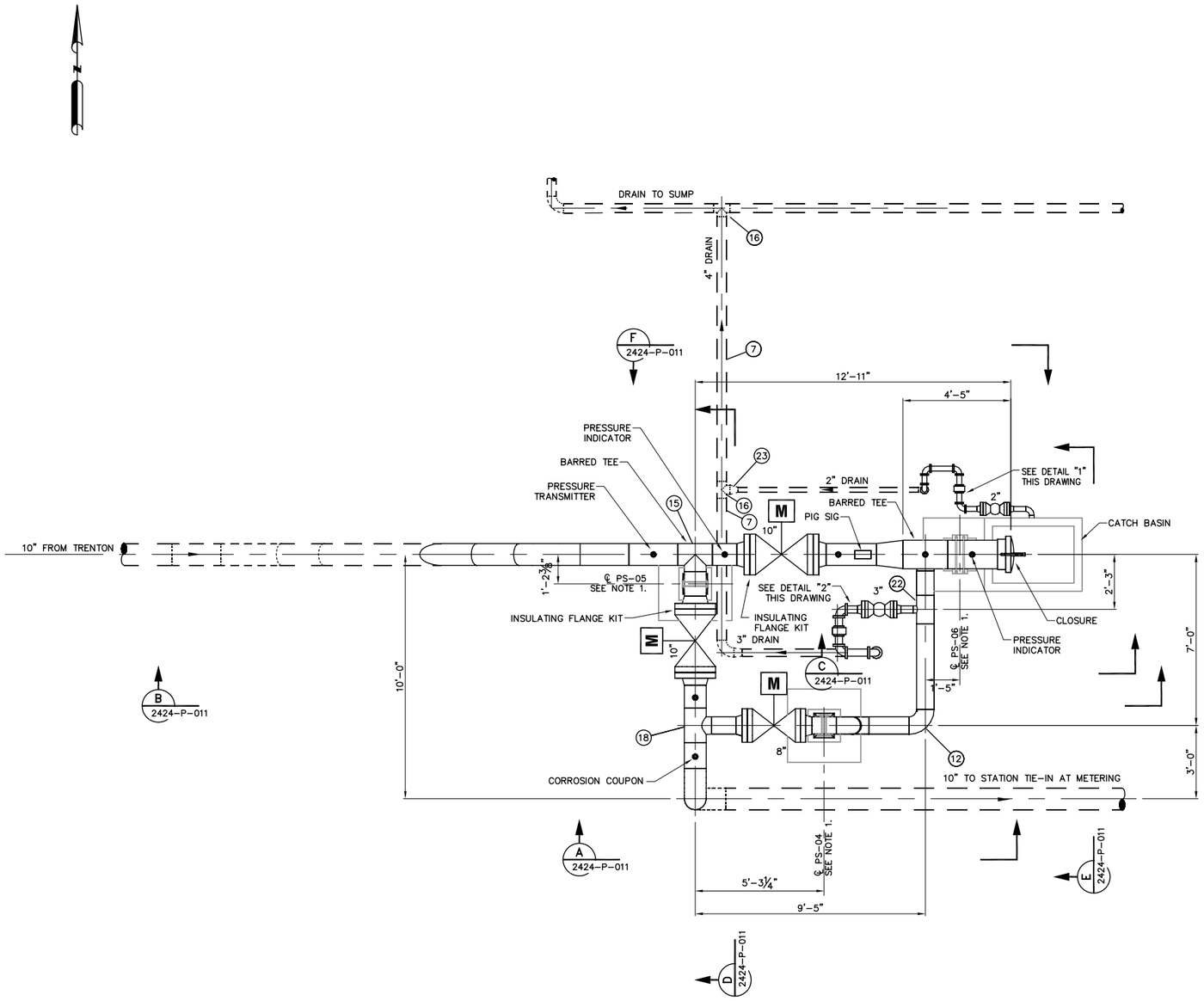

PLAN
SCALE 3/8"=1'-0"

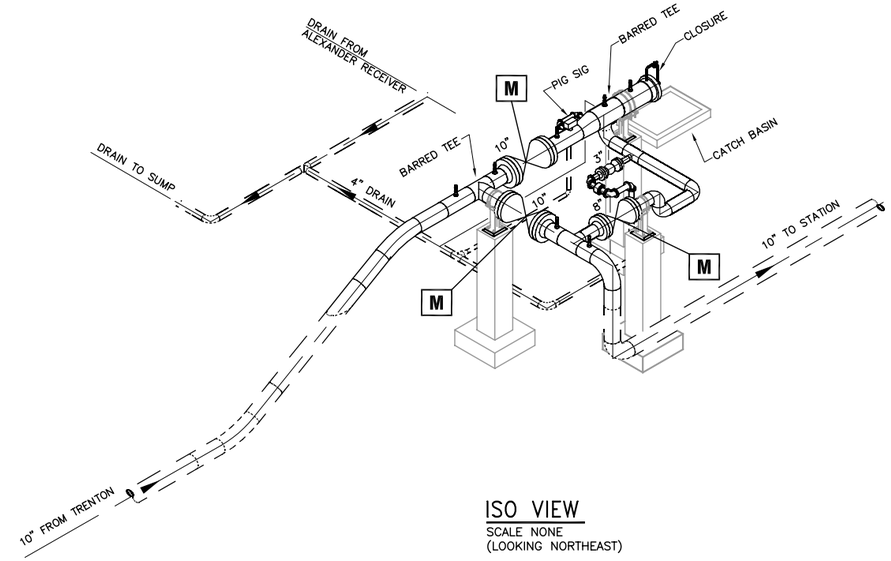

ISO VIEW
SCALE NONE
(LOOKING NORTHEAST)

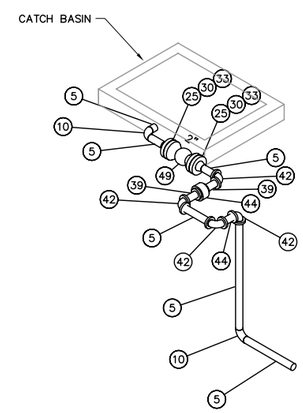

DETAIL 1
SCALE N.T.S.

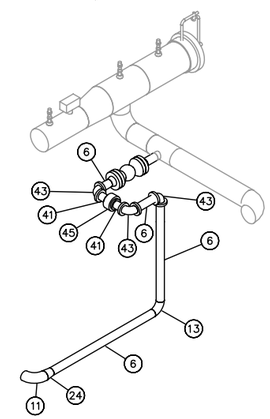

DETAIL 2
SCALE N.T.S.

NO	REVISION	DATE	APPR	BY
1	ISSUED FOR AS-BUILT	01/31/08	JRW	ADJ
0	ISSUED FOR CONTRUCTION	05/23/07	JRW	ADJ

ENBRIDGE PIPELINES (ND)

BEAVER LODGE (ND) STATION

10" RECEIVER
PIPING LAYOUT
PLAN

PROJECT:

SCALE: AS NOTED	DATE: 02/23/07	DRAWN: TJP
CHECK:	APPR:	DATE:

DWG. NO. 2424-P-010

Rooney Engineering, Inc.
12201 E. Arapahoe Rd.
Centennial, CO 80112
(303) 792-5911

NOTES:
1. FOR PIPE SUPPORT DETAILS & SCHEDULE SEE DRAWING 2424-S-101