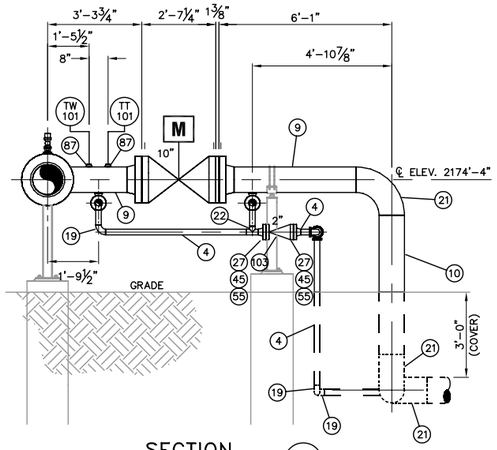

SECTION A
SCALE 3/8"=1'-0"

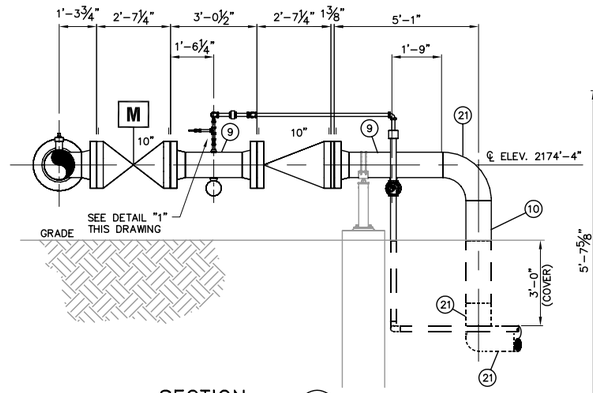

SECTION B
SCALE 3/8"=1'-0"

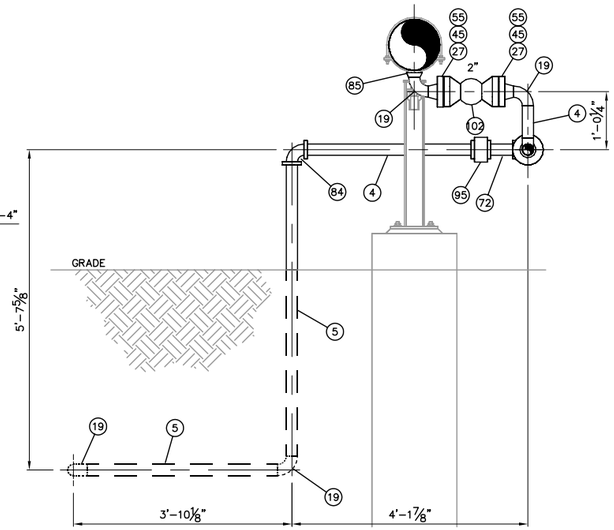

SECTION F
SCALE 3/4"=1'-0"

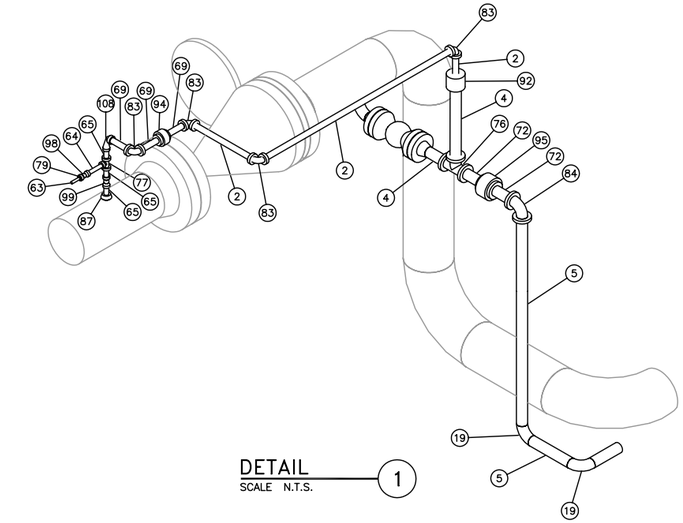

DETAIL 1
SCALE N.T.S.

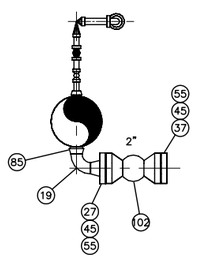

SECTION C
SCALE 3/4"=1'-0"

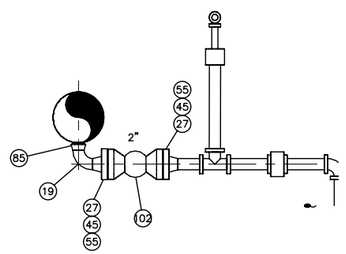

SECTION D
SCALE 3/4"=1'-0"

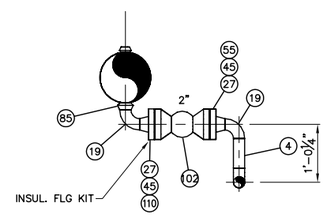

SECTION E
SCALE 3/4"=1'-0"

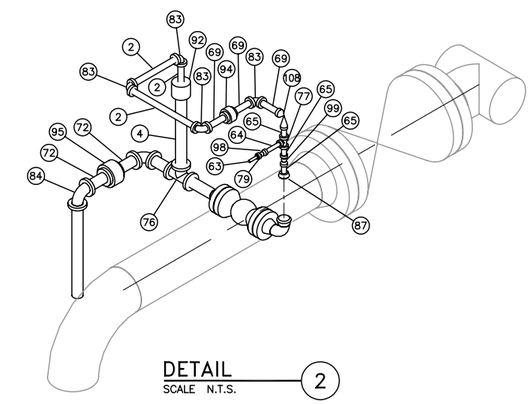

DETAIL 2
SCALE N.T.S.

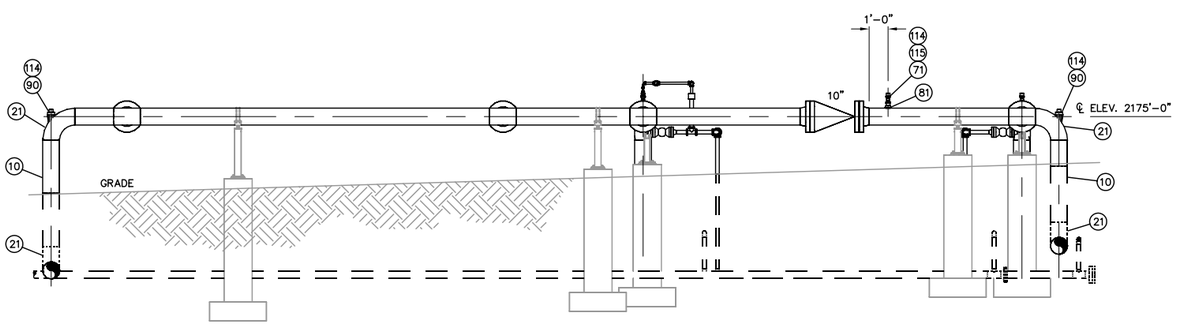

SECTION G
SCALE 1/4"=1'-0"

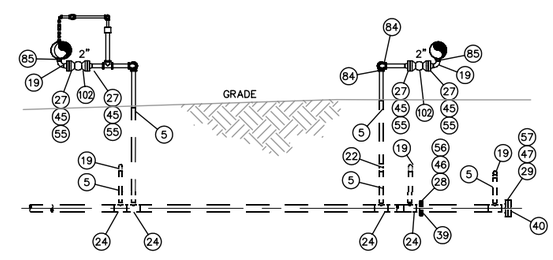

SECTION H
SCALE 1/4"=1'-0"

NO	REVISION	DATE	APPR	BY
1	AS-BUILT	2/7/08	EJK	ADJ
0	ISSUED FOR CONSTRUCTION	4/30/07	EJK	ADJ

ENBRIDGE PIPELINES (ND)

BLAISDELL STATION

STATION MANIFOLD
SECTIONS AND DETAILS

PROJECT:		
SCALE: AS NOTED	DATE: 12/18/06	DRAWN: ADJ
CHECK: EJK	APPR:	DATE:

DWG. NO. 2431-P-006

Rooney Engineering, Inc.
12201 E. Arapahoe Rd.
Centennial, CO 80112
(303) 792-5911