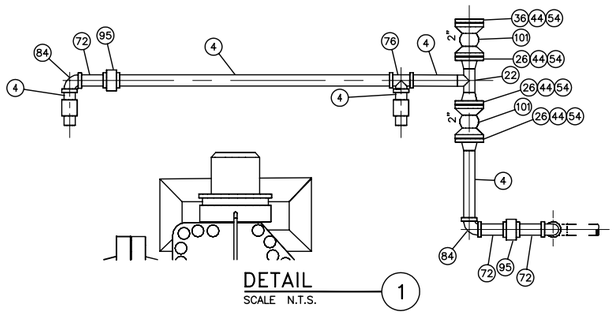

DETAIL 1
SCALE N.T.S.

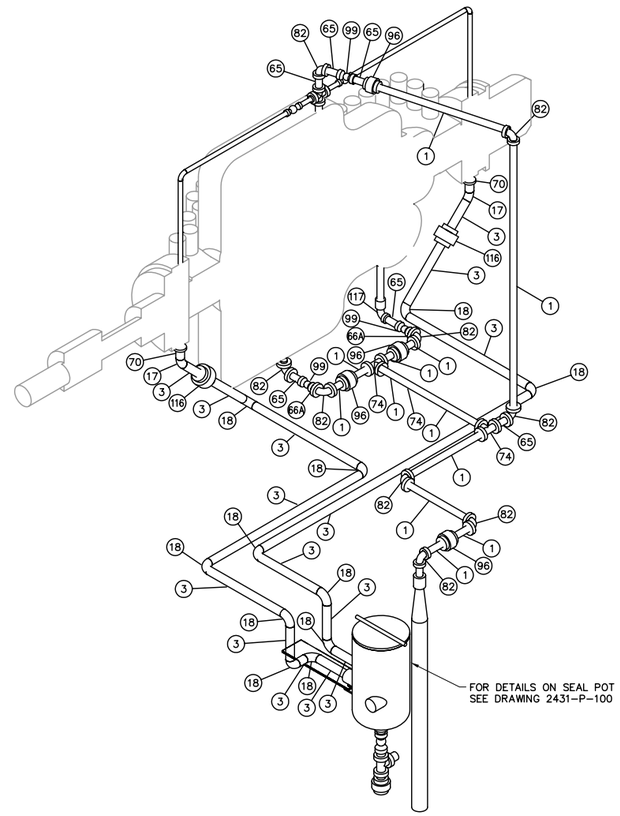

DETAIL 2
SCALE N.T.S.

NO	REVISION	DATE	APPR	BY
1	AS-BUILT	2/7/08	EJK	ADJ
0	ISSUED FOR CONSTRUCTION	4/30/07	EJK	ADJ

ENBRIDGE PIPELINES (ND)

BLAISDELL STATION

SECTIONS & DETAILS

Rooney Engineering, Inc.
12201 E. Arapahoe Rd.
Centennial, CO 80112
(303) 792-5911

PROJECT:		
SCALE: AS NOTED	DATE: 3/28/07	DRAWN: ADJ
CHECK:	APPR:	DATE:

DWG. NO. 2431-P-007