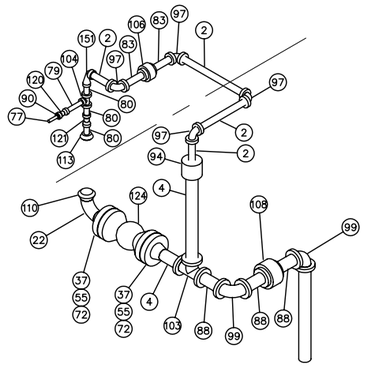

DETAIL 1
SCALE N.T.S.

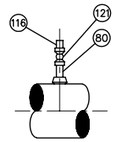

DETAIL 2
SCALE N.T.S.

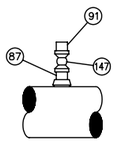

DETAIL 5
SCALE N.T.S.

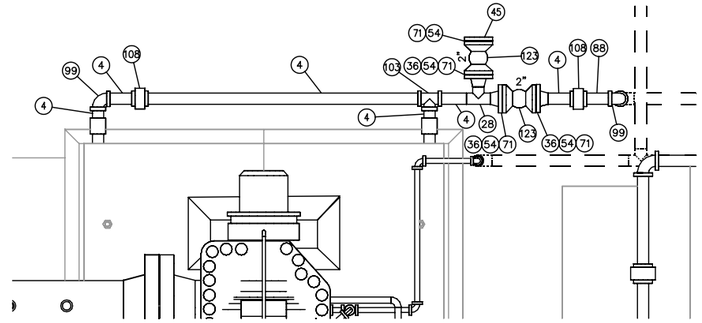

DETAIL 3
SCALE N.T.S.

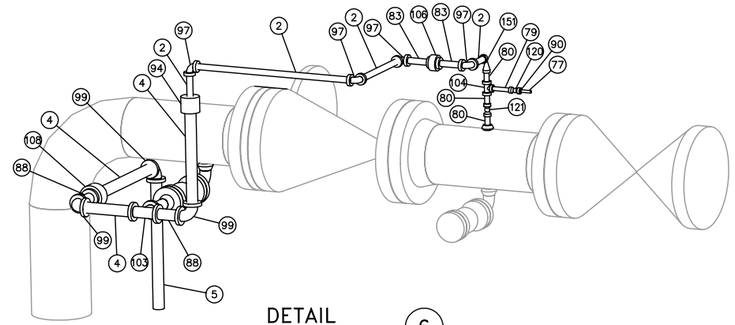

DETAIL 6
SCALE N.T.S.

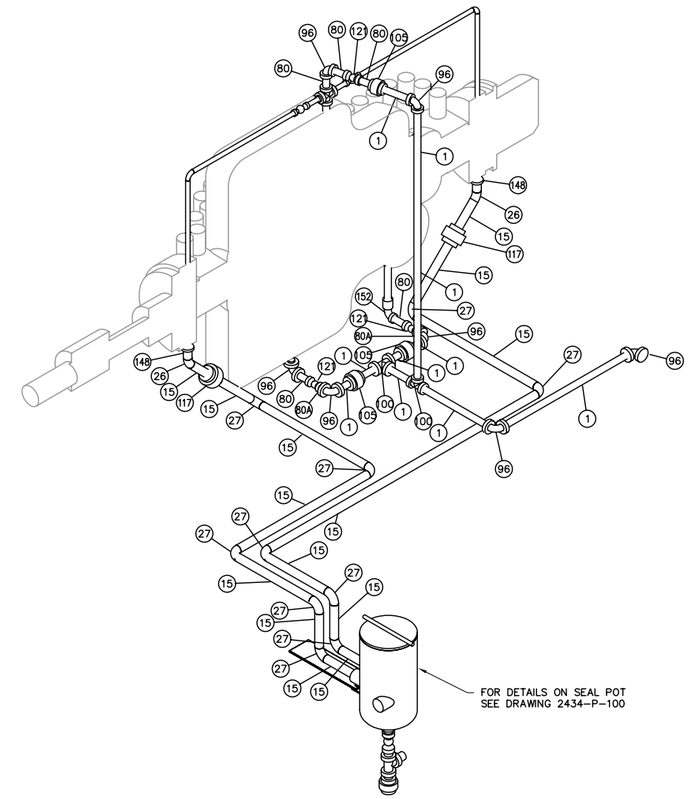

DETAIL 4
SCALE N.T.S.

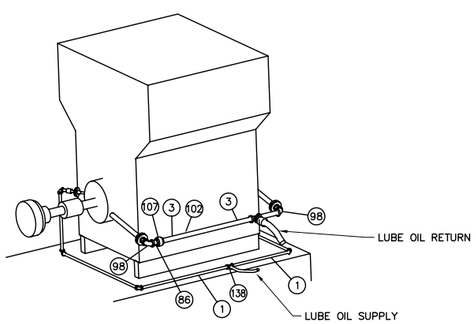

SECTION A
SCALE 1/2"=1'-0"

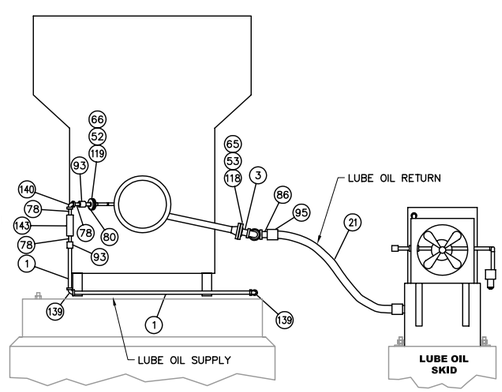

SECTION B
SCALE 1/2"=1'-0"

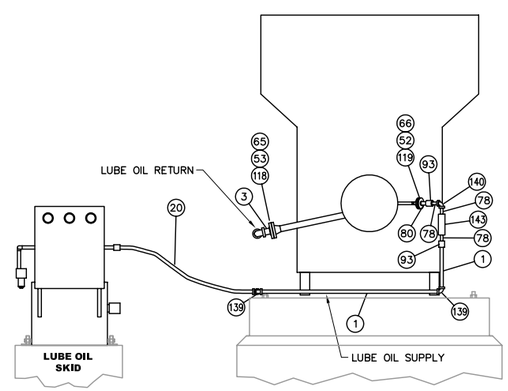

SECTION C
SCALE 1/2"=1'-0"

NO	REVISION	DATE	APPR	BY
1	AS-BUILT	3/4/08		ADJ
0	ISSUED FOR CONSTRUCTION	8/21/07		ADJ

ENBRIDGE PIPELINES (ND)

DENBIGH STATION

SECTIONS & DETAILS

Rooney Engineering, Inc.
12201 E. Arapahoe Rd.
Centennial, CO 80112
(303) 792-5911

PROJECT:		
SCALE: AS NOTED	DATE: 1/3/07	DRAWN: ADJ
CHECK:	APPR:	DATE:

DWG. NO. 2434-P-006