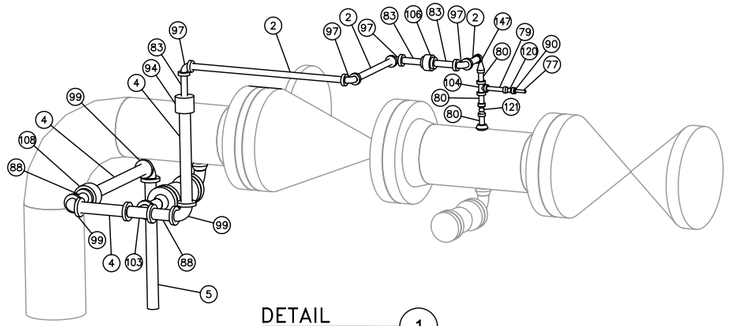

DETAIL 1
SCALE N.T.S.

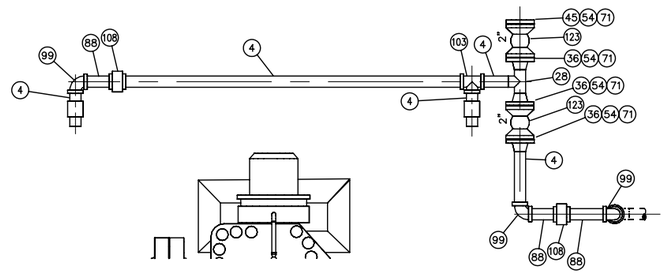

DETAIL 3
SCALE N.T.S.

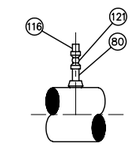

DETAIL 2
SCALE 1"=1'-0"

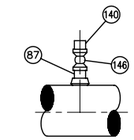

DETAIL 5
SCALE N.T.S.

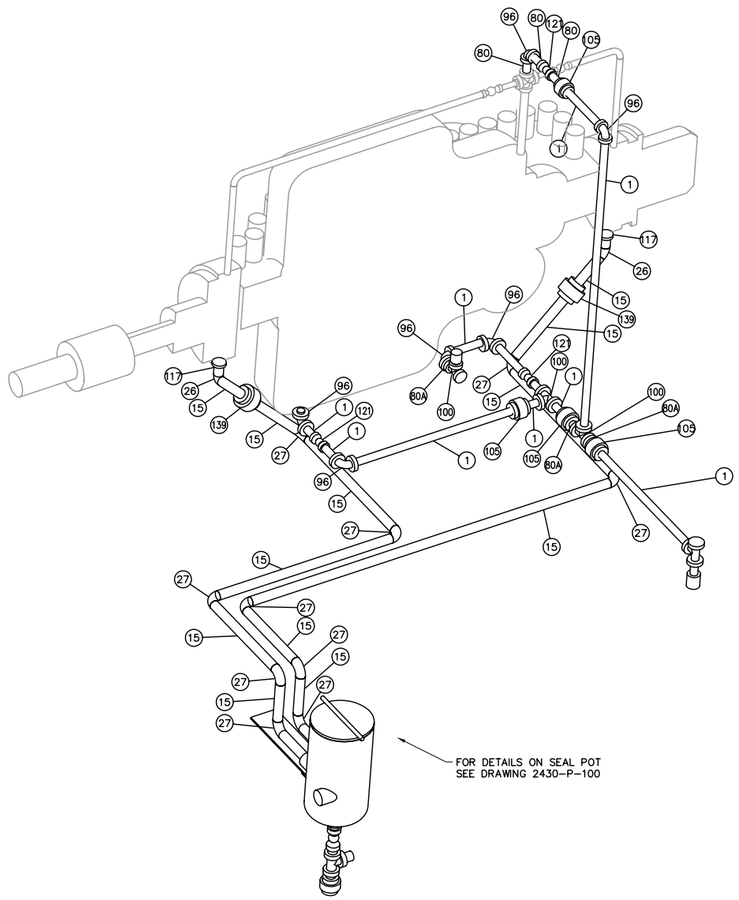

DETAIL 4
SCALE N.T.S.
(SEE NOTE 1)

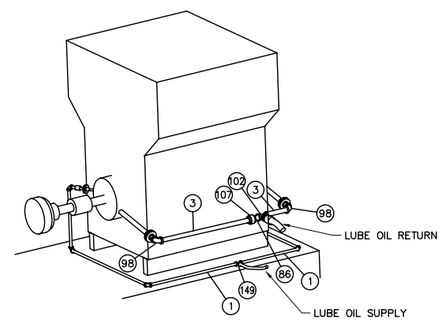

SECTION A
SCALE N.T.S.
(SEE NOTE 1)

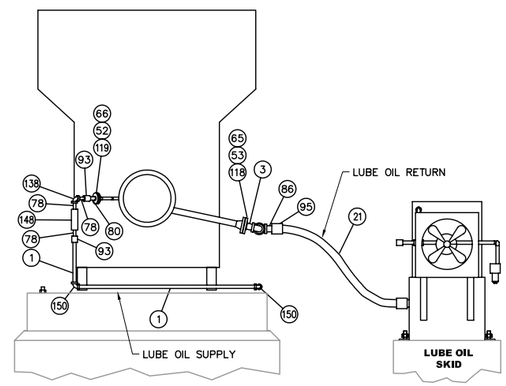

SECTION B
SCALE N.T.S.
(SEE NOTE 1)

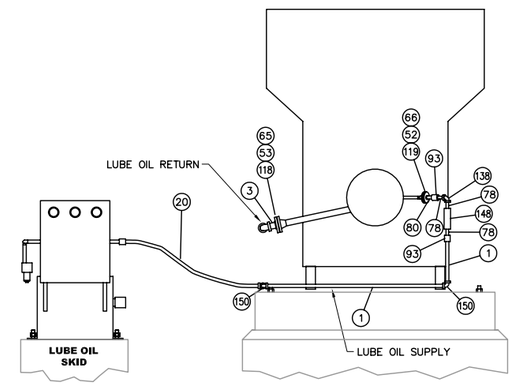

SECTION C
SCALE N.T.S.
(SEE NOTE 1)

NO	REVISION	DATE	APPR	BY
1	AS-BUILT	01/25/08	EK	ADJ
0	ISSUED FOR CONSTRUCTION	6/25/07	EK	ADJ

ENBRIDGE PIPELINES (ND)

PENN (ND) STATION

SECTIONS & DETAILS

Rooney Engineering, Inc.
12201 E. Arapahoe Rd.
Centennial, CO 80112
(303) 792-5911

PROJECT:		
SCALE: AS NOTED	DATE: 1/18/07	DRAWN: ADJ
CHECK:	APPR:	DATE:

DWG. NO. 2430-P-006