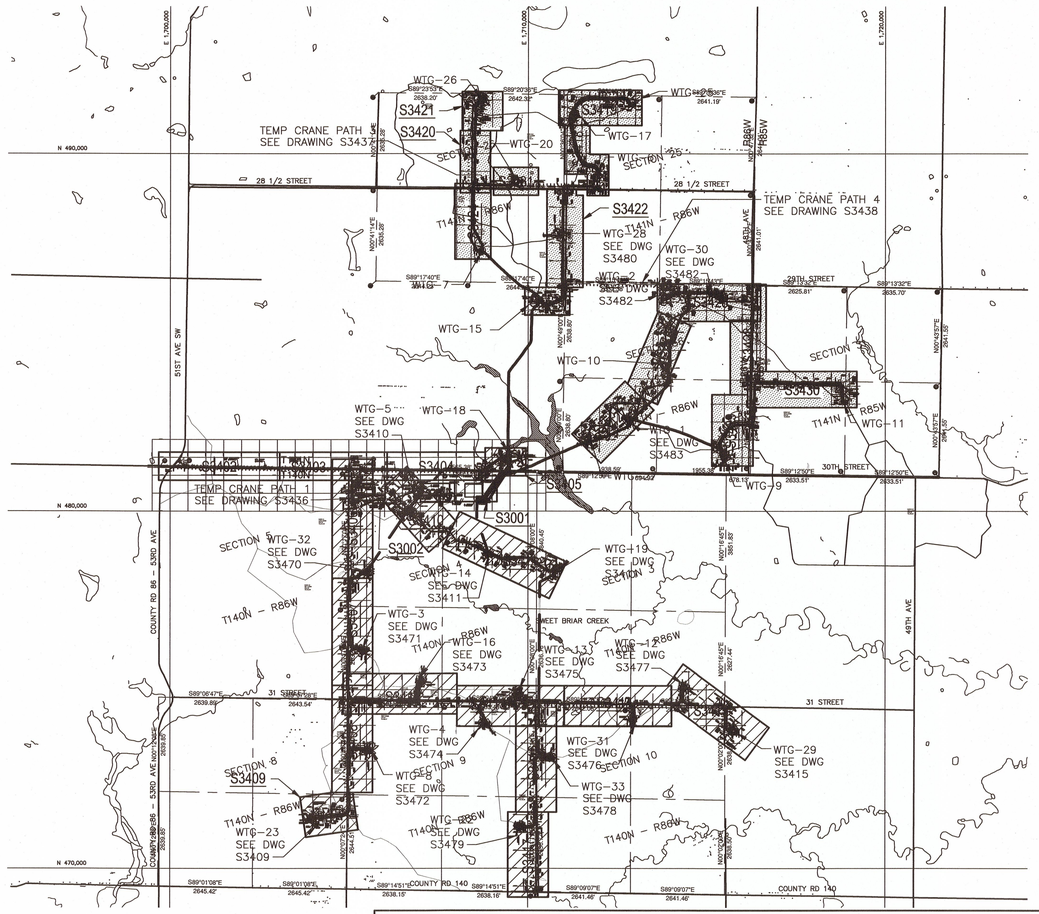

ABBREVIATIONS APPLICABLE TO ALL S3000 DRAWINGS

A	–	ARC LENGTH	LS	–	LIFT STATION
AGG	–	AGGREGATE	LTR	–	LATER
APPROX	–	APPROXIMATE	MATL	–	MATERIAL
ASPH	–	ASPHALT	MH	–	MANHOLE
AVG	–	AVERAGE	MSL	–	MEAN SEA LEVEL
BLDG	–	BUILDING	MW	–	MONITORING WELL
B/MH	–	BOTTOM OF MANHOLE ELEVATION	N	–	NORTH
BOD	–	BOTTOM OF ELECTRICAL DUCT BANK	NO.	–	NUMBER
BOP	–	BOTTOM OF PIPE	NTS	–	NOT TO SCALE
BU	–	BELL–UP	OD	–	OUTSIDE DIAMETER
CHDPE	–	CORRUGATED HIGH DENSITY POLYETHYLENE PIPE	OWS	–	OIL/WATER SEPARATOR
CJ	–	CONTRACTION JOINT	PC	–	POINT OF CURVATURE
CL	–	CENTERLINE	PE	–	PLAIN END
CMP	–	CORRUGATED METAL PIPE	PI	–	POINT OF INTERSECTION
CO	–	CLEANOUT	PL	–	PROPERTY LINE
D	–	DEGREE OF CURVE	PLCS	–	PLACES
Δ	–	DELTA ANGLE OF HORIZONTAL CURVE	PRC	–	POINT OF REVERSE CURVE
DI	–	DUCTILE IRON	PT	–	POINT OF TANGENT
DIA	–	DIAMETER	PVC	–	POINT OF VERTICAL CURVE
DIM	–	DIMENSION	PVI	–	POINT OF VERTICAL INTERSECTION
DWG	–	DRAWING	PVT	–	POINT OF VERTICAL TANGENT
E	–	EAST	R	–	RADIUS
EA	–	EACH	RCP	–	REINFORCED CONCRETE PIPE
EF	–	EACH FACE	RD	–	ROOF DRAIN
EGP	–	EDGE OF PAVEMENT	RED	–	REDUCER
EGS	–	EDGE OF SHOULDER	REQD	–	REQUIRED
EHH	–	ELECTRICAL HANDHOLE	REV	–	REVISION
EL	–	ELEVATION	R/W	–	RIGHT–OF–WAY
EJ	–	EXPANSION JOINT	S	–	SOUTH
EW	–	EACH WAY	SE	–	SUPERELEVATION
EXP	–	EXPANSION	SIM	–	SIMILAR
FD	–	FLOOR DRAIN	STA	–	STATION
FDN	–	FOUNDATION	T	–	TANGENT LENGTH
FF	–	FINISHED FLOOR	TMH	–	TOP OF MANHOLE
FG	–	FINISHED GRADE	TOC	–	TOP OF CONCRETE
FRP	–	FIBER REINFORCED PIPE	TOG	–	TOP OF GRATING
FT	–	FOOT	TOP	–	TOP OF PAVEMENT
HC	–	HANDICAPPED	TYP	–	TYPICAL
HDPE	–	HIGH DENSITY POLYETHYLENE	UNO	–	UNLESS NOTED OTHERWISE
HVCM	–	HORIZ & VERT CONTROL MONUMENT	V	–	DESIGN SPEED
HP	–	HIGH POINT	VERT	–	VERTICAL
ID	–	INSIDE DIAMETER	W	–	WEST
IN	–	INCH	W/	–	WITH
INV	–	INVERT	W/O	–	WITHOUT
L	–	LENGTH	WP	–	WORK POINT
LC	–	LENGTH OF VERTICAL CURVE			

GENERAL NOTES

1. GENERAL NOTES APPLICABLE TO ALL S3000 AND S3400 SERIES DRAWINGS.
2. ALL COORDINATES SHOWN ARE NORTH DAKOTA STATE PLANE, SOUTH ZONE, NAD83 US FEET. ELEVATIONS ARE BASED ON THE NAVD 88 SYSTEM.
3. SEE SITE DEVELOPMENT SPECIFICATION FOR ADDITIONAL CONSTRUCTION SPECIFICATIONS.

SITE GRADING:

1. GRADE BETWEEN NEW CONTOURS SHALL SLOPE UNIFORMLY UNLESS NOTED OTHERWISE.
2. ELEVATIONS SHOWN ARE PROPOSED FINISHED GRADE.
3. THE RESHAPING OF THE GROUND SURFACE BY EXCAVATION AND FILLING OR A COMBINATION OF BOTH, TO OBTAIN PLANNED GRADES, SHALL PROCEED IN ACCORDANCE WITH THE FOLLOWING CRITERIA:
   - A. THE PERMANENT CUT FACE OF EARTH EXCAVATION SHALL NOT BE STEEPER THAN THREE HORIZONTAL TO ONE VERTICAL (3:1), UNLESS NOTED OTHERWISE.
   - B. THE PERMANENT EXPOSED FACES OF FILLS SHALL NOT BE STEEPER THAN 3:1, UNLESS NOTED OTHERWISE.
   - C. PROVISION SHOULD BE MADE TO CONDUCT SURFACE WATER SAFELY TO DRAINAGE DITCHES TO PREVENT SURFACE RUNOFF FROM DAMAGING CUT FACES AND FILL SLOPES.
   - D. EXCAVATIONS SHOULD NOT BE MADE SO CLOSE TO PROPERTY LINES AS TO ENDANGER ADJOINING PROPERTY WITHOUT PROTECTING SUCH PROPERTY FROM EROSION, SLIDING, SETTLING, OR CRACKING.
   - E. NO FILL SHOULD BE PLACED WHERE IT WILL SLIDE OR WASH UPON THE PREMISES OF ANOTHER OWNER OR UPON ADJACENT WETLANDS, WATERCOURSES, OR WATER BODIES.

SEDIMENT AND EROSION CONTROL:

1. IN GENERAL, ALL CONSTRUCTION ACTIVITIES SHALL PROCEED IN SUCH A MANNER SO AS NOT TO POLLUTE ANY WETLANDS, WATERCOURSE, WATER BODY, AND CONDUIT CARRYING WATER, ETC.. THE CONTRACTOR SHALL LIMIT, INSOFAR AS POSSIBLE, THE SURFACE AREA OF EARTH MATERIALS EXPOSED BY CONSTRUCTION METHODS AND IMMEDIATELY PROVIDE PERMANENT AND TEMPORARY POLLUTION CONTROL MEASURES TO PREVENT CONTAMINATION OF ADJACENT WETLANDS, WATERCOURSES, AND WATER BODIES, AND TO PREVENT, INSOFAR AS POSSIBLE, EROSION ON THE SITE.
2. SEE DWG S3920 FOR EROSION CONTROL SECTIONS AND DETAILS.
3. CONTRACTOR IS RESPONSIBLE FOR MAINTAINING EROSION CONTROL ON A TIME AND MATERIAL BASIS.
4. EROSION CONTROL MEASURES TO BE INSTALLED BY CONTRACTOR IN ACCORDANCE WITH THE STORM WATER POLLUTION PREVENTION PLAN.
5. SILT FENCE LOCATIONS SHOWN ON DRAWINGS MAY BE RELOCATED AT THE DISCRETION OF THE SITE MANAGER TO ACCOUNT FOR INTERFERENCES RELOCATION OF SILT FENCE SHALL PROVIDE THE INTENDED SILT BARRIER AND PROTECTION OF UNDISTURBED LAND AS SHOWN ON THE DRAWINGS. SILT FENCE SHALL BE RELOCATED IMMEDIATELY DOWNSTREAM OF ANY ADDITIONAL GRADING OR TRENCHING REQUIRED TO COMPLETE THE PROJECT.
6. INSPECTION OF EROSION CONTROL MEASURES SHALL OCCUR AT LEAST ONCE EVERY 14 DAYS, AND WITHIN 24 HOURS FOLLOWING A RAINFALL OF 1/2 INCH OR GREATER, OR AN EQUIVALENT SNOW MELT EVENT. INSPECTION TO BE PERFORMED BY PURCHASER.
7. TOPSOIL MUST BE STOCKPILED UPSTREAM OF SILT FENCE.
8. SOIL STOCKPILES OR OTHER AREAS DISTURBED DURING CONSTRUCTION SHALL BE STABILIZED BY SEEDING OR OTHER ACCEPTABLE MEANS WITHIN 7 DAYS IF IT IS TO REMAIN DORMANT FOR MORE THAN 14 DAYS.
9. UPON FINAL GRADING, ALL DISTURBED AREAS SHALL BE STABILIZED BY SEEDING AND MULCHING WITHIN TWO WEEKS. WHEN THIS OCCURS OUTSIDE THE STANDARD SPECIFICATION SEEDING DATES, SEED SHALL CONSIST OF TEMPORARY COVER CROP. SEE SECTION 02371.2.5 OF THE SEEDING AND EROSION CONTROL SPECIFICATION FOR SEED MIXTURES.
10. ALL STORM WATER POLLUTION PREVENTION PRACTICES SHALL REMAIN IN PLACE UNTIL ALL UPSTREAM COVER HAS BEEN ESTABLISHED.
11. CONTRACTOR SHALL PRESERVE AND/OR PROTECT EXISTING TREES AND VEGETATION OUTSIDE OF AREAS TO BE GRADED. NOTIFY SITE MANAGER PRIOR TO REMOVING ANY TREES.
12. CONSTRUCTION VEHICLE ACCESS SHALL BE LIMITED TO ACCESS POINTS DESIGNATED ON THE PLANS.

REGISTERED PROFESSIONAL ENGINEER — RONALD E. GULLICKS 2890 — DATE 12/29/10 — REV.7 — NORTH DAKOTA

BILL OF QUANTITIES

DESCRIPTION	UNIT	FALL 2009 EST. QTY	PHASE 1A EST. QTY	PHASE 1B EST. QTY
CLEAR & GRUB	ACRE	25.4	74.7	59.8
TOPSOIL EXCAVATION	CY	24900	85095	48218
COMMON EXCAVATION	CY	47300	117997	150467
COMMON BORROW	CY	40500	95038	121479
GEOTEXTILE	SY	45400	133800	83147
AGGREGATE SURFACING	TONS	15652	46314	25776
RIP RAP	CY	800	588	381
12" CHDPE	LF	0	95	71
12" CHDPE FLARED END SECTION	EA	0	4	2
15" CHDPE	LF	0	480	48
15" CHDPE FLARED END SECTION	EA	0	16	2
18" CHDPE	LF	88	46	705
18" CHDPE FLARED END SECTION	EA	4	2	16
21" CHDPE	LF	0	47	0
21" CHDPE FLARED END SECTION	EA	0	2	0
24" CHDPE	LF	102	202	265
24" CHDPE FLARED END SECTION	EA	4	8	10
27" CHDPE	LF	0	0	90
27" CHDPE FLARED END SECTION	EA	0	0	4
30" CHDPE	LF	0	447	0
30" CHDPE FLARED END SECTION	EA	0	10	0
36" CHDPE	LF	0	497	0
36" CHDPE FLARED END SECTION	EA	0	16	0
42" CHDPE	LF	352	0	0
42" CHDPE FLARED END SECTION	EA	8	0	0
48" CHDPE	LF	0	171	337
48" CHDPE FLARED END SECTION	EA	0	8	10
SILT FENCE	LF	5400	33400	28699
TURF REINFORCEMENT MAT	SY	1300	0	0
SYNTHETIC CHECK DAM	EA	55	162	174

VICINITY MAP

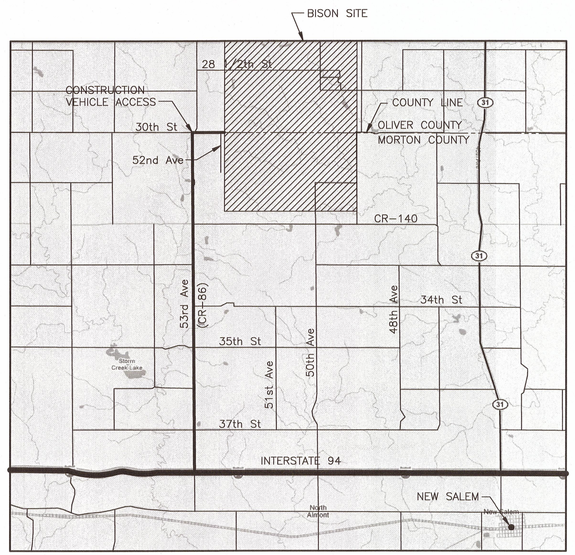

LEGEND APPLICABLE TO ALL S3000 DRAWINGS

- GRADE BREAKLINE
- SILT FENCE
- PROPERTY LINE
- R/W — LIMIT OF RIGHT–OF–WAY
- NEW SECURITY FENCE
- SWITCHYARD FENCE
- 99 — NEW CONTOUR
- AREA INLET
- NEW STORM WATER SYSTEM
- NEW CULVERT
- DITCH/SWALE FLOW INDICATOR
- GRADE SURFACE FLOW INDICATOR
- 123.45 + NEW SPOT ELEVATION
- SURVEY CONTROL MONUMENT
- EXISTING FENCE
- 99 — EXISTING CONTOUR
- EXISTING STATUTORY SECTION LINE EASEMENT
- PROPOSED ROADWAY EASEMENT
- S3000 — 2009 CONSTRUCTION
- S3000 — PHASE 1A CONSTRUCTION
- S3000 — PHASE 1B CONSTRUCTION
- COLLECTION SYSTEM
- ASPHALT SURFACING
- AGGREGATE SURFACING
- REINFORCED CONCRETE
- EARTH
- RIPRAP
- SAND/BEDDING MAT'L
- GRASS
- WETLANDS
- CHECK DAM
- TURF REINFORCED MAT
- 1 / S3000 — SECTION OR DETAIL NUMBER / DRAWING DESIGNATION NUMBER

NO.	DATE	REVISION DESCRIPTION	BY	APPROVED
6	21/MAR/11	REVISED PER ECN N–S–0006	SMC	JMS
5	14/MAR/11	REVISED PER ECN N–S–0005	SMC	JMS
7	12–8–11	CONSTRUCTION REVISIONS, W.O.#17480	NJG	

THIS DOCUMENT WAS ORIGINALLY ISSUED AND SEALED BY DALE S. LINDBERG JR., REGISTRATION NUMBER 1973 ON OCTOBER 5, 2009 AND THE ORIGINAL DOCUMENTS ARE STORED WITH MINNESOTA POWER, AT 30 WEST SUPERIOR STREET, DULUTH, MN 55802.

BLACK & VEATCH CORPORATION

ENGINEER	RDN	DRAWN	PJK
CHECKED	JMS	DATE	05/OCT/09
B&V PROJECT	DRAWING NUMBER		

I HEREBY CERTIFY THAT THIS DOCUMENT WAS PREPARED BY ME OR UNDER MY DIRECT SUPERVISION AND THAT I AM A DULY REGISTERED PROFESSIONAL ENGINEER UNDER THE LAWS OF THE STATE OF NORTH DAKOTA.
SIGNED (BALLS) DALE S. LINDBERG JR.
DATE 05/OCT/09 REG. NO. 1973

minnesota power

BISON WIND GENERATING FACILITY NEW SALEM, ND

GRADING DRAINAGE AND SITE–PLAN KEY PLAN, GENERAL NOTES & LEGEND

SHEET 1 | REV. 7

165233–CSTF–S3000

CADD DRAWING – FOR REPRODUCTION ONLY

SCALE: 1"=2000'

MICROFILMED / / | CODE

NOTES

1. SEE DRAWING S3000 FOR GENERAL NOTES, LEGEND AND ABBREVIATIONS.
2. ALL CONTOURS REPRESENT FINISHED GRADE UNLESS NOTED OTHERWISE.
3. SEE DRAWING S3911 FOR TYPICAL WTG LAYDOWN/ASSEMBLY AREA DETAILS.
4. SEE DRAWING S3912 FOR TYPICAL ROAD HORIZONTAL AND VERTICAL CURVE DETAILS.
4. SEE DRAWING S3901 FOR TYPICAL CULVERT AND RIPRAP DETAILS.

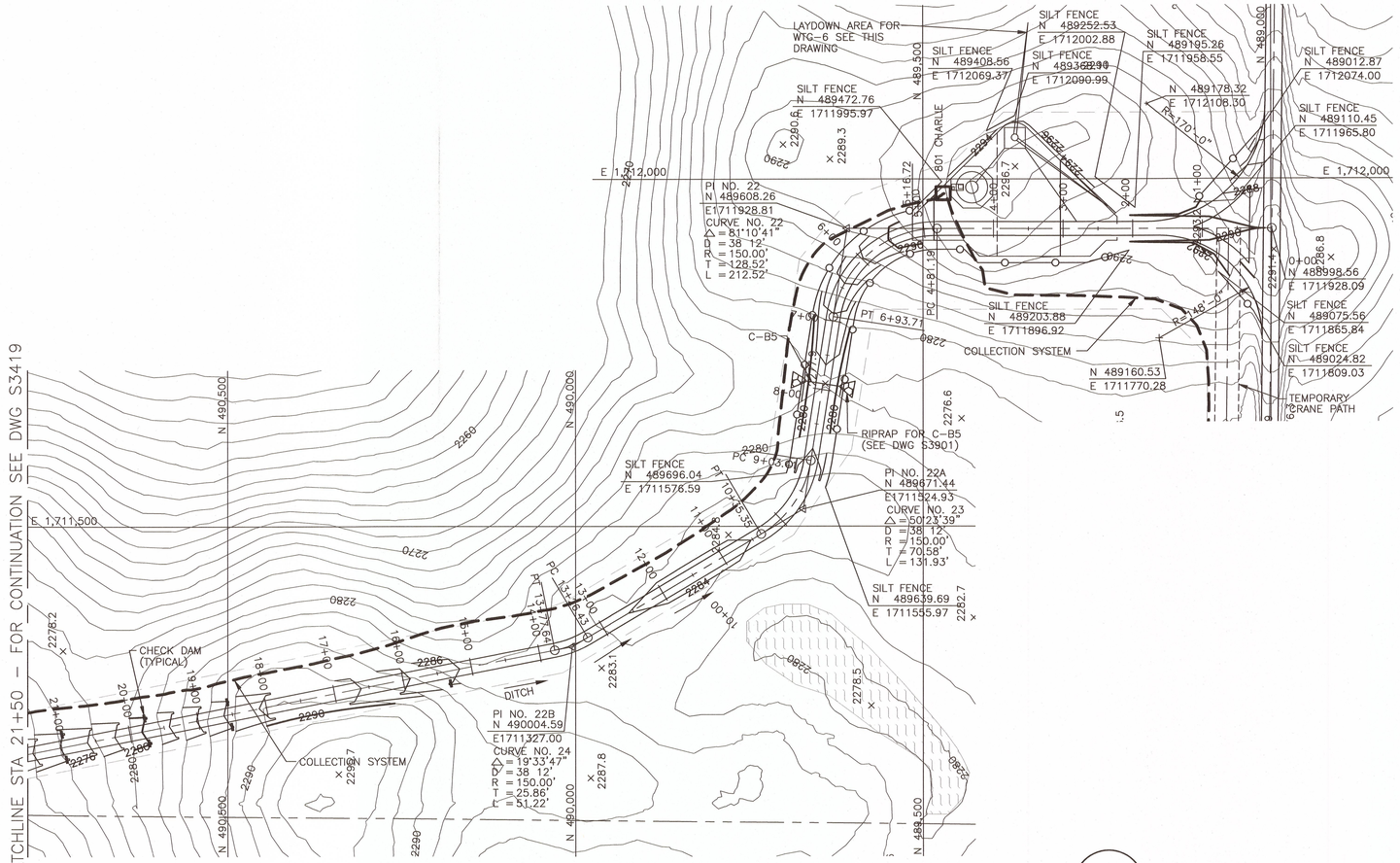

ROAD PLAN – WTG–6, WTG–17, & WTG–25 ACCESS RD – STA 0+00 TO STA 21+50

SCALE: 1"=100'

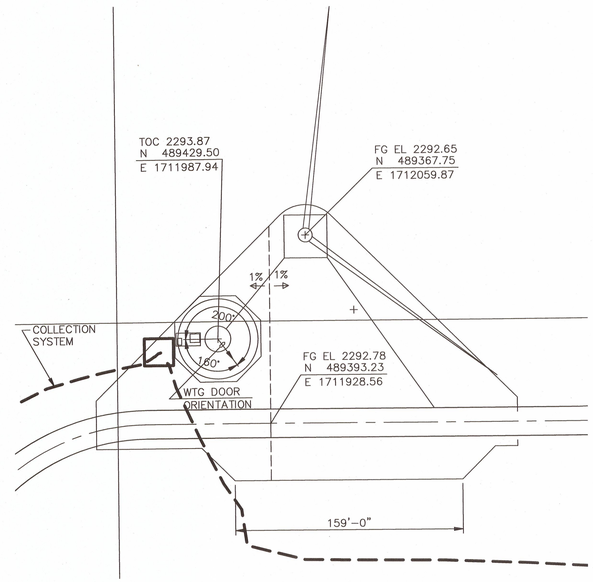

LAYDOWN AREA FOR WTG–6

50' 25' 0 50' 100'

1"=50'

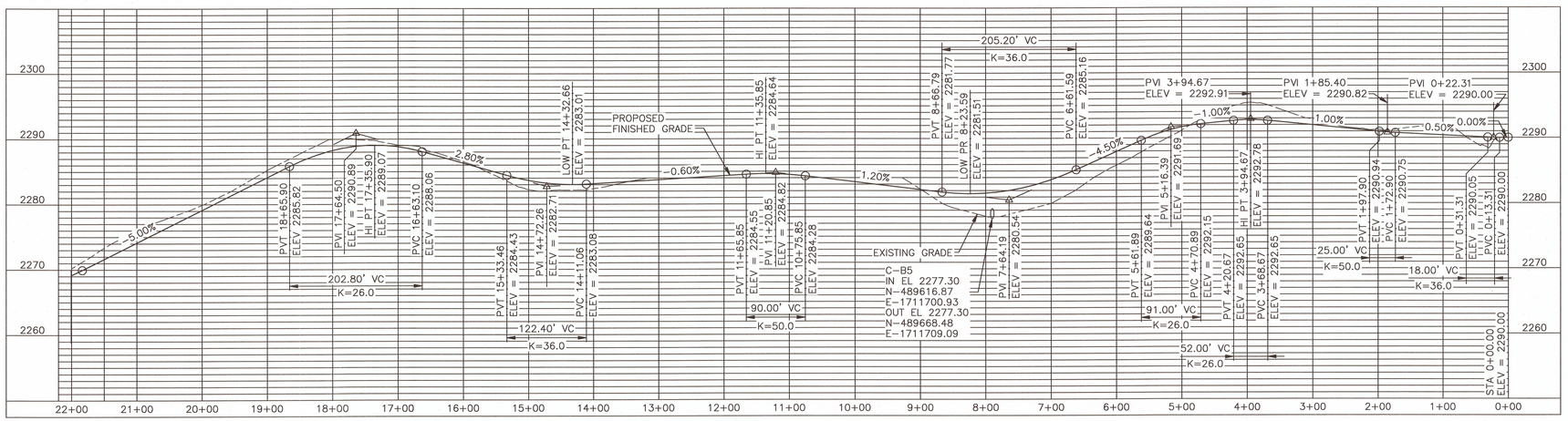

PROFILE – WTG–6, WTG–17, & WTG–25 ACCESS RD – STA 0+00 TO STA 21+50

HORIZ SCALE: 1"=100'
VERT SCALE: 1"=10'

10' 0 10' 20'

1"=10'

100' 50' 0 100' 200'

1"=100'

NO.	DATE	REVISION DESCRIPTION	BY	APPROVED
2	27/MAY/10	REVISED PER ECN N–S–0003	RDN	JMS
4	10–29–11	CONSTRUCTION REVISIONS, W.O.#17480	NJG	
3	14/MAR/11	REVISED PER ECN N–S–0005	SMC	JMS

THIS DOCUMENT WAS ORIGINALLY ISSUED AND SEALED BY JULIE M STANEK, REGISTRATION NUMBER PE–6480 ON FEBRUARY 12, 2010 AND THE ORIGINAL DOCUMENTS ARE STORED WITH MINNESOTA POWER, AT 30 WEST SUPERIOR STREET, DULUTH, MN 55802.

BLACK & VEATCH CORPORATION

ENGINEER	RDN	DRAWN	PJK
CHECKED	JMS	DATE	07/JAN/10

B&V PROJECT DRAWING NUMBER

I HEREBY CERTIFY THAT THIS DOCUMENT WAS PREPARED BY ME OR UNDER MY DIRECT SUPERVISION AND THAT I AM A DULY REGISTERED PROFESSIONAL ENGINEER UNDER THE LAWS OF THE STATE OF NORTH DAKOTA

SIGNED JULIE M STANEK

DATE 14/MAY/11 REGISTRATION NO. PE–6480

minnesota power

BISON WIND GENERATING FACILITY NEW SALEM, ND

ROAD PLAN AND PROFILE WTG–6, WTG–17, & WTG–25 ACCESS RD STA 0+00 TO 21+50

SHEET 1 REV. 4

165233–1STA–S3418

REGISTERED PROFESSIONAL ENGINEER RONALD E. GULLICKS 2890 DATE 1/10/2012 REV.4 NORTH DAKOTA

CADD DRAWING – FOR REPRODUCTION ONLY

SCALE:

MICROFILMED		CODE	
/	/		

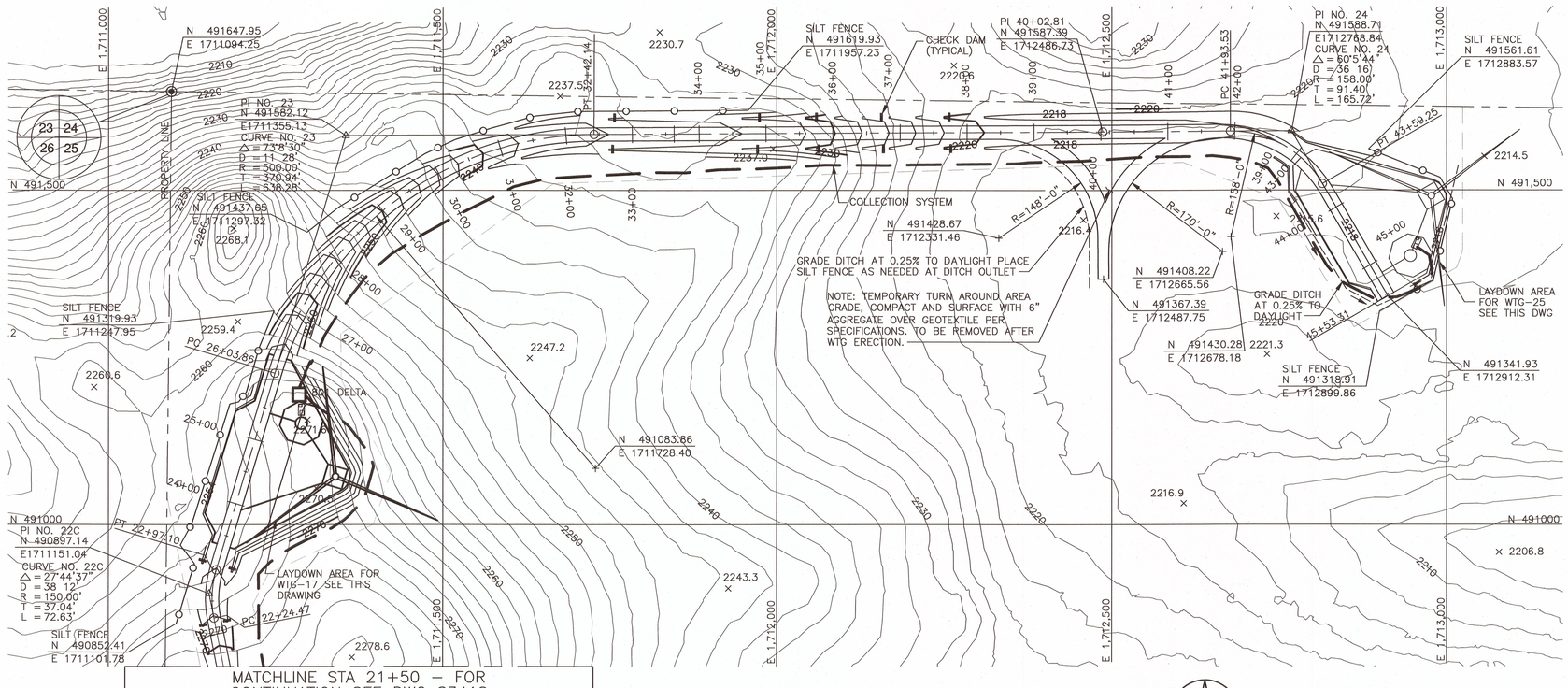

ROAD PLAN – WTG-6, WTG-17 & WTG-25 ACCESS RD – STA 21+50 TO STA 45+53.31

SCALE: 1"=100'

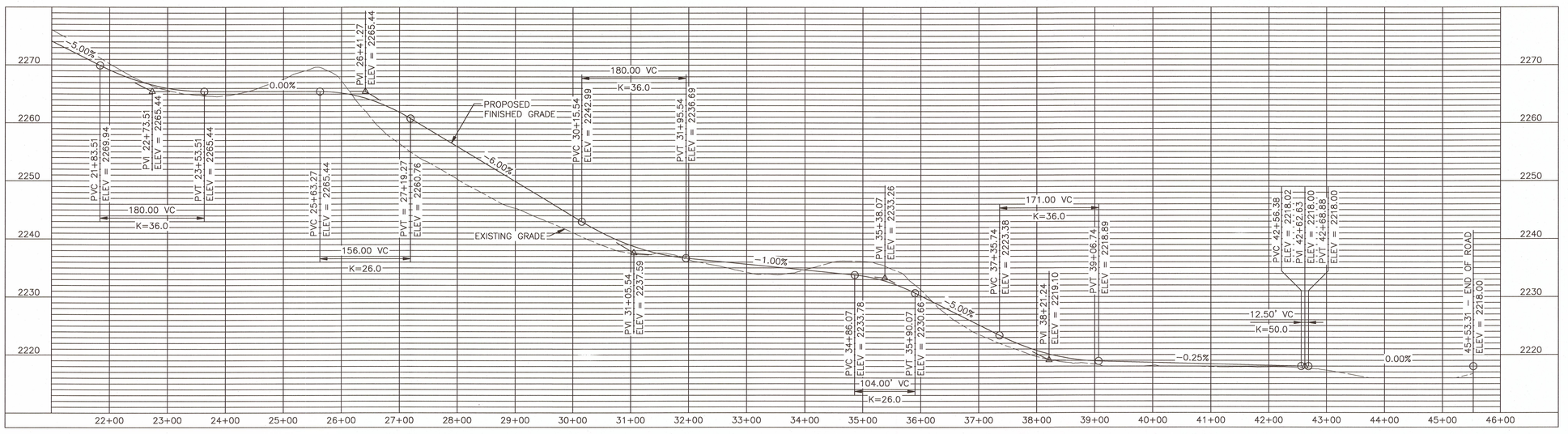

PROFILE – WTG 6, WTG-17 & WTG-25 ACCESS RD – STA 21+50 TO STA 45+53.31

HORIZ SCALE: 1"=100'
VERT SCALE: 1"=10'

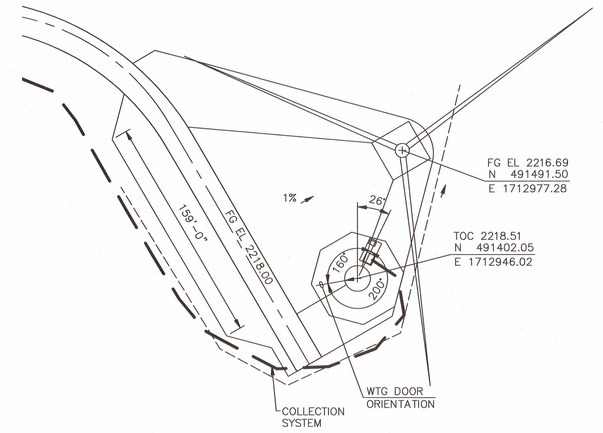

LAYDOWN AREA FOR WTG-25

50' 25' 0 50' 100'
1"=50'

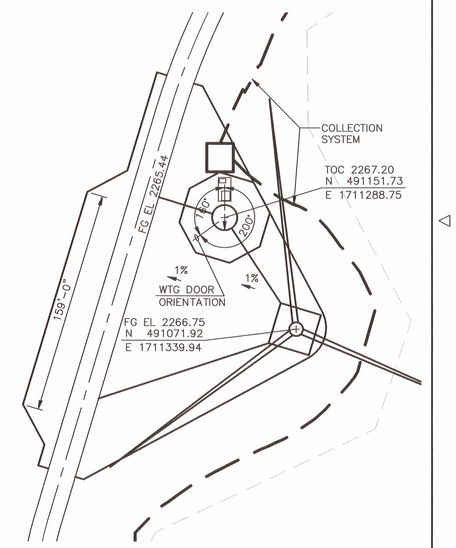

LAYDOWN AREA FOR WTG-17

50' 25' 0 50' 100'
1"=50'

10' 0 10' 20'
1"=10'

100' 50' 0 100' 200'
1"=100'

REGISTERED PROFESSIONAL ENGINEER
RONALD E. GULLICKS
2890
DATE 7/10/2012
REV.3
NORTH DAKOTA

NOTES

1. SEE DRAWING S3000 FOR GENERAL NOTES, LEGEND AND ABBREVIATIONS.
2. ALL CONTOURS REPRESENT FINISHED GRADE UNLESS NOTED OTHERWISE.
3. SEE DRAWING S3911 FOR TYPICAL WTG LAYDOWN/ASSEMBLY AREA DETAILS.
4. SEE DRAWING S3912 FOR TYPICAL ROAD HORIZONTAL AND VERTICAL CURVE DETAILS.

NO.	DATE	REVISION DESCRIPTION	BY	APPROVED
2	14/MAR/11	REVISED PER ECN N-S-0005	SMC	JMS
1	12/FEB/10	APPROVED FOR CONSTRUCTION	RDN	JMS
3	10-29-11	CONSTRUCTION REVISIONS, W.O.#17480	NJG	

THIS DOCUMENT WAS ORIGINALLY ISSUED AND SEALED BY JULIE M. STANEK, REGISTRATION NUMBER PE-6480 ON FEBRUARY 12, 2010 AND THE ORIGINAL DOCUMENTS ARE STORED WITH MINNESOTA POWER, AT 30 WEST SUPERIOR STREET, DULUTH, MN 55802.

BLACK & VEATCH CORPORATION

ENGINEER	RDN	DRAWN	PJK
CHECKED	JMS	DATE	07/JAN/10
B&V PROJECT DRAWING NUMBER			

I HEREBY CERTIFY THAT THIS DOCUMENT WAS PREPARED BY ME OR UNDER MY DIRECT SUPERVISION AND THAT I AM A DULY REGISTERED PROFESSIONAL ENGINEER UNDER THE LAWS OF THE STATE OF NORTH DAKOTA

SIGNED JULIE M. STANEK
DATE 14/MAR/11 REG. NO. PE-6480

minnesota power

BISON WIND GENERATING FACILITY NEW SALEM, ND

ROAD PLAN AND PROFILE WTG-6, WTG-17, & WTG-25 ACCESS RD STA 21+50 TO 45+53.31

SHEET 1 REV. 3

165233-1STA-S3419

CADD DRAWING – FOR REPRODUCTION ONLY

SCALE:

MICROFILMED / / CODE

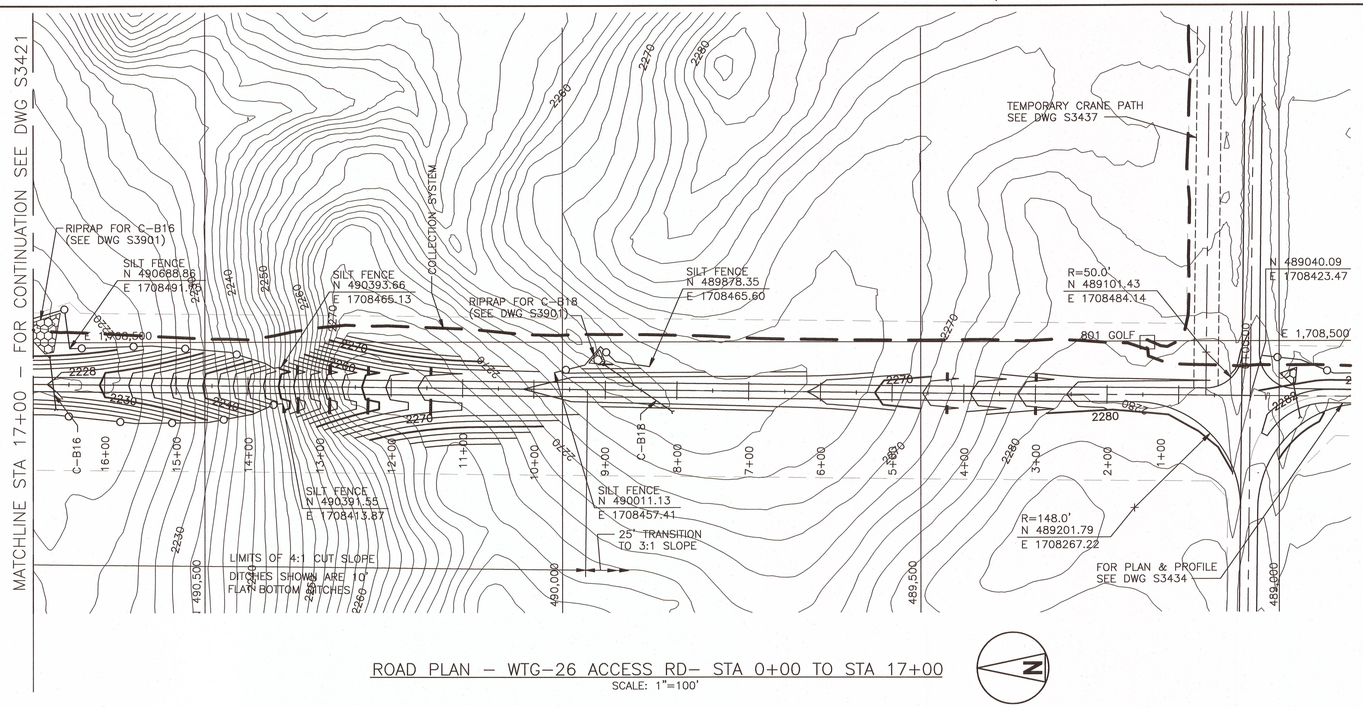

ROAD PLAN – WTG-26 ACCESS RD– STA 0+00 TO STA 17+00
SCALE: 1"=100'

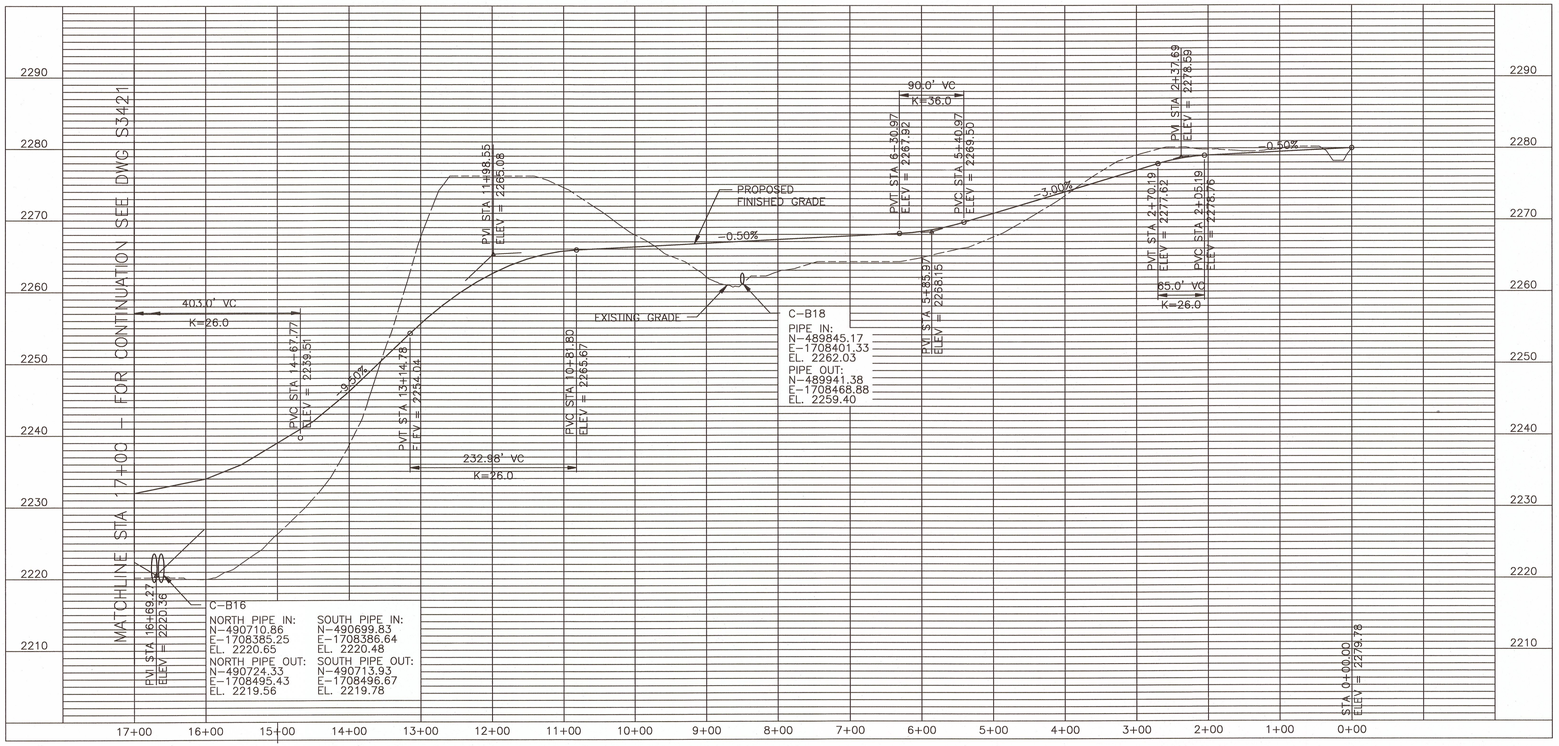

PROFILE – WTG-26 ACCESS RD– STA 0+00 TO STA 17+00
HORIZ SCALE: 1"=100'

10' 0 10' 20'
1"=10'

100' 50' 0 100' 200'
1"=100'

REG. STERED PROFESSIONAL ENGINEER
RONALD E. GULLICKS
2890
DATE 11/10/2011
REV.5
NORTH DAKOTA

NOTES

1. SEE DRAWING S3000 FOR GENERAL NOTES, LEGEND AND ABBREVIATIONS.
2. ALL CONTOURS REPRESENT FINISHED GRADE UNLESS NOTED OTHERWISE.
3. SEE DRAWING S3911 FOR TYPICAL WTG LAYDOWN/ASSEMBLY AREA DETAILS.
4. SEE DRAWING S3912 FOR TYPICAL ROAD HORIZONTAL AND VERTICAL CURVE DETAILS.
5. SEE DRAWING S3901 FOR TYPICAL CULVERT AND RIPRAP DETAILS.

NO.	DATE	REVISION DESCRIPTION	BY	APPROVED
5	10-29-11	CONSTRUCTION REVISIONS, W.O.#17480	NJG	
4	21/MAR/11	REVISED PER ECN N-S-0006	RDN	JMS
3	14/MAR/11	REVISED PER ECN N-S-0005	SMC	JMS

THIS DOCUMENT WAS ORIGINALLY ISSUED AND SEALED BY JULIE M STANEK, REGISTRATION NUMBER PE-6480 ON FEBRUARY 12, 2010 AND THE ORIGINAL DOCUMENTS ARE STORED WITH MINNESOTA POWER, AT 30 WEST SUPERIOR STREET, DULUTH, MN 55802.

BLACK & VEATCH CORPORATION
ENGINEER RDN DRAWN PJK
CHECKED JMS DATE 07/JAN/10
B&V PROJECT DRAWING NUMBER

I HEREBY CERTIFY THAT THIS DOCUMENT WAS PREPARED BY ME OR UNDER MY DIRECT SUPERVISION AND THAT I AM A DULY REGISTERED PROFESSIONAL ENGINEER UNDER THE LAWS OF THE STATE OF NORTH DAKOTA.
SIGNED JULIE M. STANEK
DATE 12/FEB/10 REG. NO. PE-6480

minnesota power

BISON WIND GENERATING FACILITY NEW SALEM, ND

ROAD PLAN AND PROFILE
WTG-26 ACCESS RD
STA 0+00 TO 17+00

SHEET 1 REV. 5
165233-1STA-S3420

CADD DRAWING – FOR REPRODUCTION ONLY

SCALE:

MICROFILMED / /

CODE

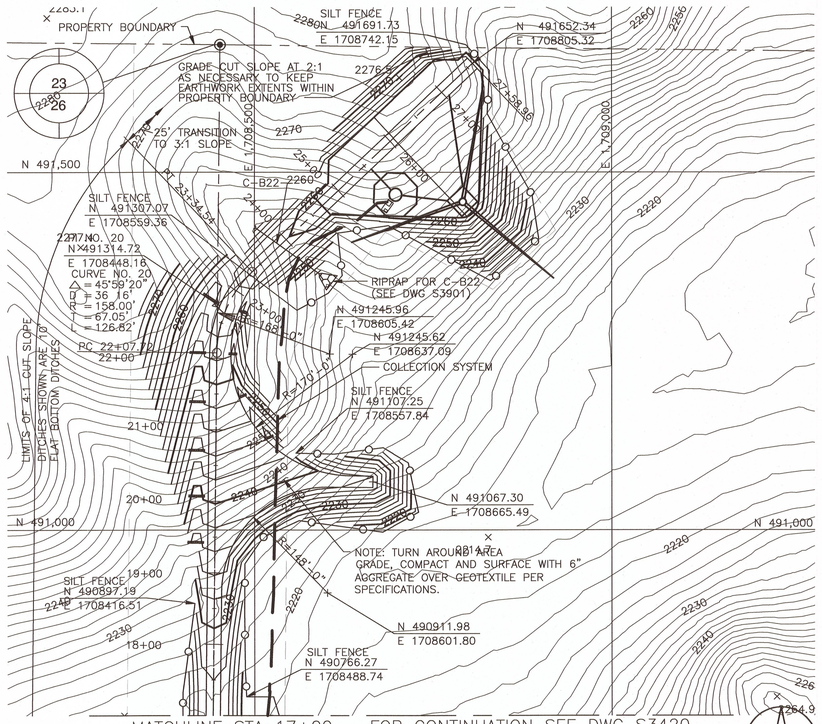

ROAD PLAN – WTG-26 ACCESS RD – STA 17+00 TO STA 27+58.96

SCALE: 1"=100'

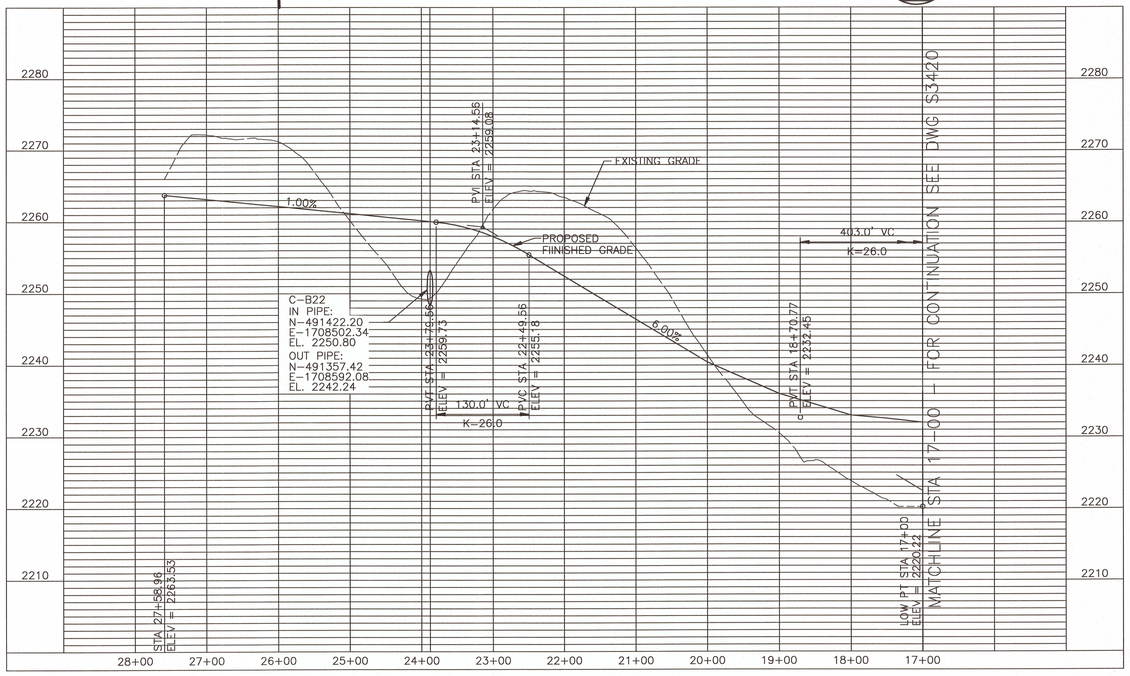

PROFILE – WTG-26 ACCESS RD – STA 17+00 TO STA 27+58.96

HORIZ SCALE: 1"=100'

VERT SCALE: 1"=10'

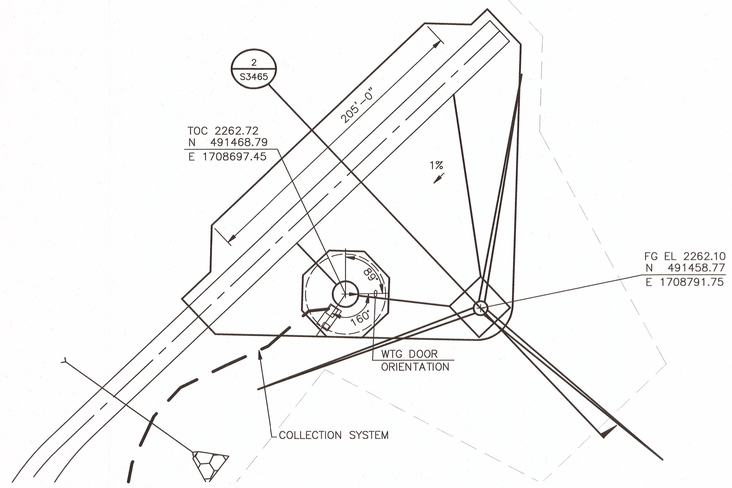

LAYDOWN AREA FOR WTG-26

50' 25' 0 50' 100'

1"=50'

10' 0 10' 20'

1"=10'

100' 50' 0 100' 200'

1"=100'

REGISTERED PROFESSIONAL ENGINEER
RONALD E. GULLICKS
2890
DATE 1/10/2012
REV.4
NORTH DAKOTA

NOTES

1. SEE DRAWING S3000 FOR GENERAL NOTES, LEGEND AND ABBREVIATIONS.
2. ALL CONTOURS REPRESENT FINISHED GRADE UNLESS NOTED OTHERWISE.
3. SEE DRAWING S3911 FOR TYPICAL WTG LAYDOWN/ASSEMBLY AREA DETAILS.
4. SEE DRAWING S3912 FOR TYPICAL ROAD HORIZONTAL AND VERTICAL CURVE DETAILS.
5. SEE DRAWING S3901 FOR TYPICAL CULVERT AND RIPRAP DETAILS.

NO.	DATE	REVISION DESCRIPTION	BY	APPROVED
2	27/MAY/10	REVISED PER ECN N-S-0003	RDN	JMS
4	11-1-11	CONSTRUCTION REVISIONS, W.O.#17480	NJG	
3	14/MAR/11	REVISED PER ECN N-S-0005	SMC	JMS

THIS DOCUMENT WAS ORIGINALLY ISSUED AND SEALED BY JULIE M STANEK, REGISTRATION NUMBER PE-6480 ON FEBRUARY 12, 2010 AND THE ORIGINAL DOCUMENTS ARE STORED WITH MINNESOTA POWER, AT 30 WEST SUPERIOR STREET, DULUTH, MN 55802.

BLACK & VEATCH CORPORATION

ENGINEER	RDN	DRAWN	PJK
CHECKED	JMS	DATE	07/JAN/10

B&V PROJECT DRAWING NUMBER

I HEREBY CERTIFY THAT THIS DOCUMENT WAS PREPARED BY ME OR UNDER MY DIRECT SUPERVISION AND THAT I AM A DULY REGISTERED PROFESSIONAL ENGINEER UNDER THE LAWS OF THE STATE OF NORTH DAKOTA

SIGNED JULIE M STANEK

DATE 14/MAR/11 REG NO. PE-6480

minnesota power

BISON WIND GENERATING FACILITY NEW SALEM, ND

ROAD PLAN AND PROFILE WTG-26 ACCESS RD STA 17+00 TO 27+58.96

SHEET 1 REV. 4

165233-1STA-S3421

CADD DRAWING – FOR REPRODUCTION ONLY

SCALE:

MICROFILMED / /

CODE

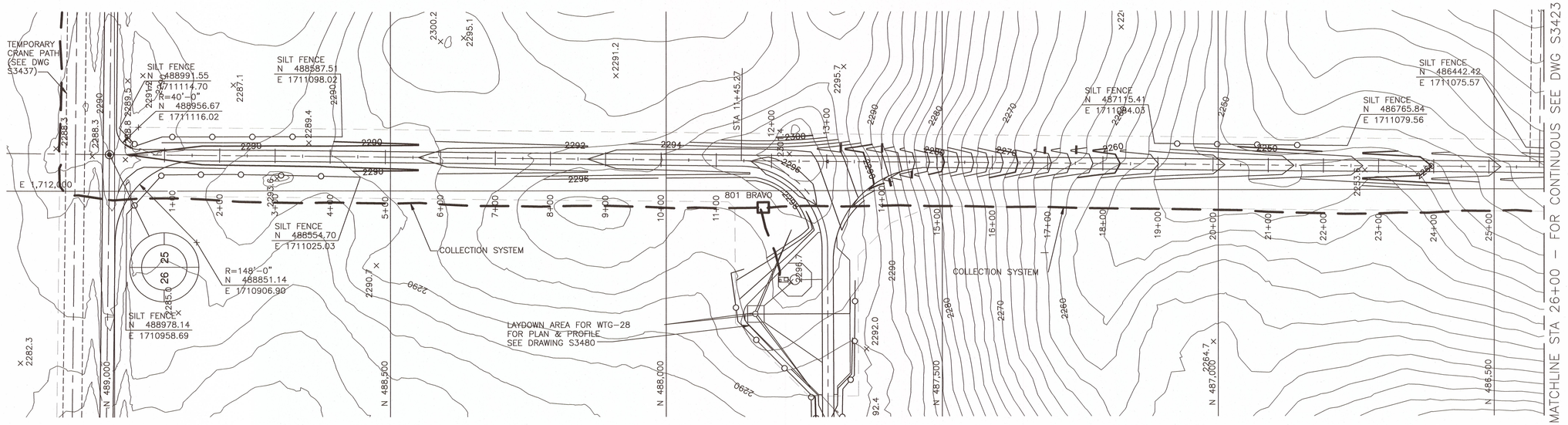

ROAD PLAN – 49TH AVE SW & WTG-28 ACCESS RD- STA 0+00 TO STA 26+00

SCALE: 1"=100'

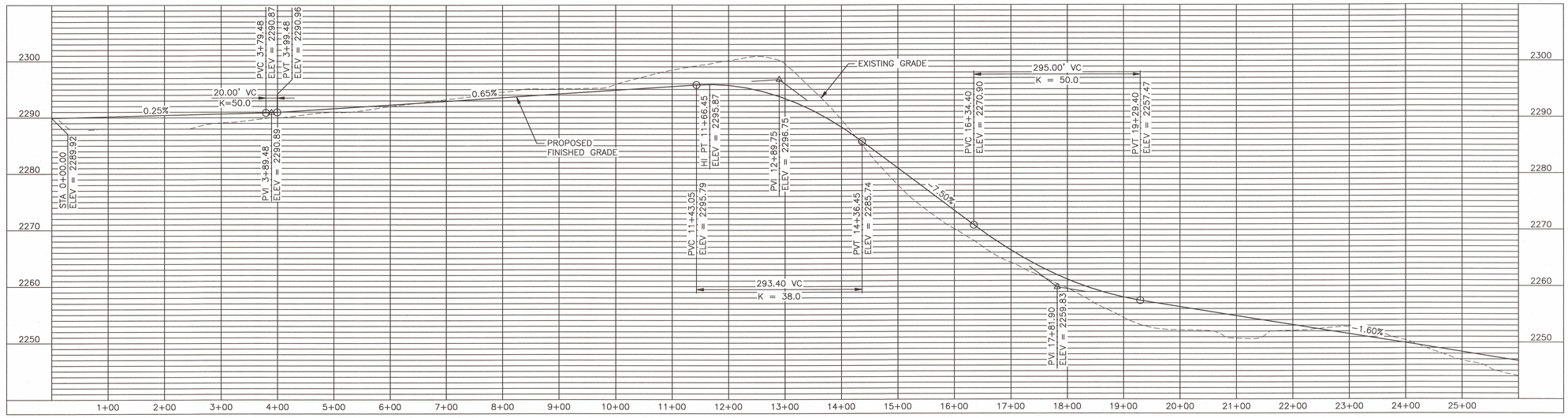

PROFILE – 49TH AVE SW & WTG-15 ACCESS RD – STA 0+00 TO STA 26+00

HORIZ SCALE: 1"=100'

VERT SCALE: 1"=10'

REGISTERED PROFESSIONAL ENGINEER
RONALD E. GULLICKS
2890
DATE 1/10/2012
REV.3
NORTH DAKOTA

10' 0 10' 20'
1"=10'

100' 50' 0 100' 200'
1"=100'

NOTES

1. SEE DRAWING S3000 FOR GENERAL NOTES, LEGEND AND ABBREVIATIONS.
2. ALL CONTOURS REPRESENT FINISHED GRADE UNLESS NOTED OTHERWISE.
3. SEE DRAWING S3911 FOR TYPICAL WTG LAYDOWN/ASSEMBLY AREA DETAILS.
4. SEE DRAWING S3912 FOR TYPICAL ROAD HORIZONTAL AND VERTICAL CURVE DETAILS.

NO.	DATE	REVISION DESCRIPTION	BY	APPROVED
2	14/MAR/11	REVISED PER ECN N-S-0005	SMC	JMS
1	12/FEB/10	APPROVED FOR CONSTRUCTION	RDN	JMS
3	11-1-11	CONSTRUCTION REVISIONS, W.O.#17480	NJG	

THIS DOCUMENT WAS ORIGINALLY ISSUED AND SEALED BY JULIE M STANEK, REGISTRATION NUMBER PE-6480 ON FEBRUARY 12, 2010 AND THE ORIGINAL DOCUMENTS ARE STORED WITH MINNESOTA POWER, AT 30 WEST SUPERIOR STREET, DULUTH, MN 55802.

BLACK & VEATCH CORPORATION

ENGINEER	RDN	DRAWN	PJK
CHECKED	JMS	DATE	07/JAN/10

B&V PROJECT DRAWING NUMBER

I HEREBY CERTIFY THAT THIS DOCUMENT WAS PREPARED BY ME OR UNDER MY DIRECT SUPERVISION AND THAT I AM A DULY REGISTERED PROFESSIONAL ENGINEER UNDER THE LAWS OF THE STATE OF NORTH DAKOTA

SIGNED JULIE M STANEK

DATE 14/MAR/11 REG NO. PE-6480

minnesota power

BISON WIND GENERATING FACILITY NEW SALEM, ND

ROAD PLAN AND PROFILE 49TH AVE SW AND WTG-28 ACCESS RD STA 0+00 TO 26+00

SHEET 1 REV. 3

165233-1STA-S3422

CADD DRAWING – FOR REPRODUCTION ONLY

SCALE:

MICROFILMED / /

CODE

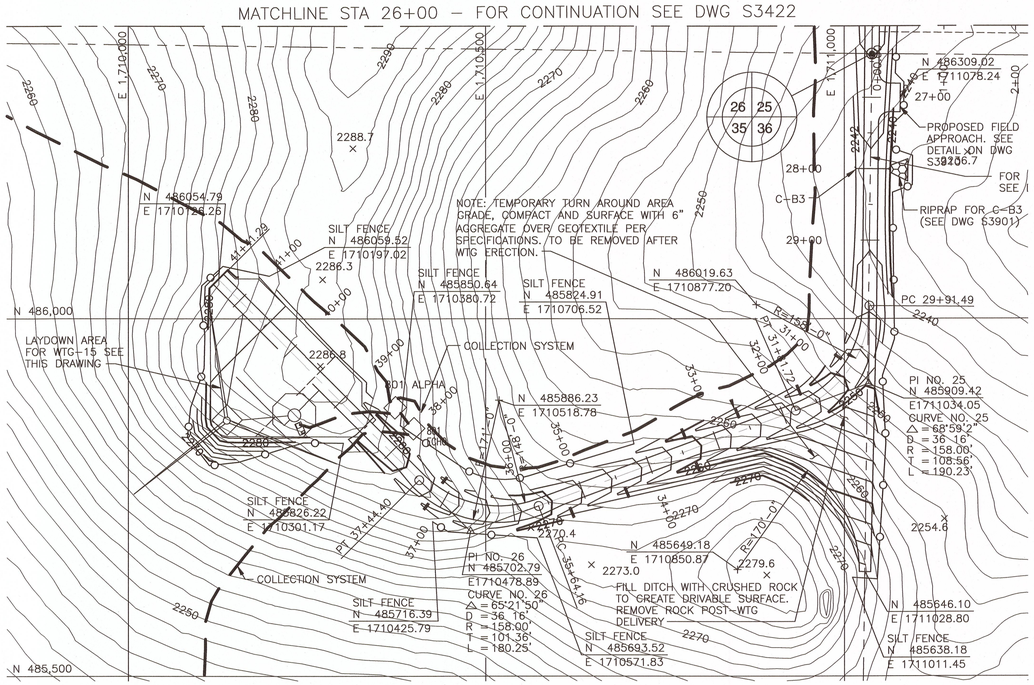

ROAD PLAN – 49TH AVE SW & WTG-15 ACCESS RD- STA 26+00 TO STA 41+41.29

SCALE: 1"=100'

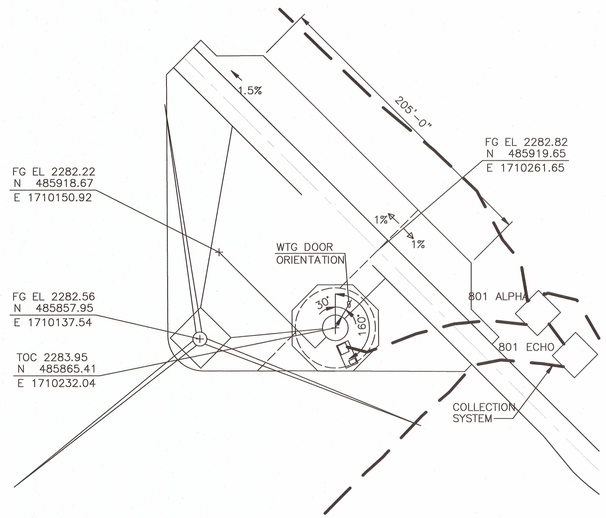

LAYDOWN AREA FOR WTG-15

50' 25' 0 50' 100'

1"=50'

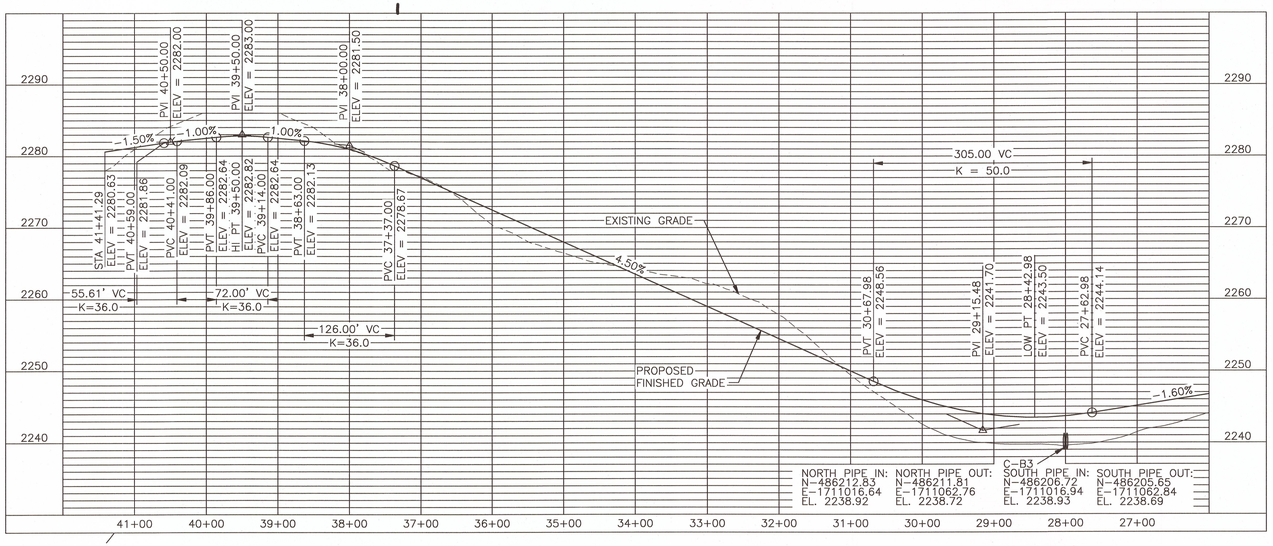

PROFILE – 49TH AVE SW & WTG-15 ACCESS RD – STA 26+00 TO STA 41+41.29

HORIZ SCALE: 1"=100'
VERT SCALE: 1"=10'

10' 0 10' 20'

1"=10'

100' 50' 0 100' 200'

1"=100'

REGISTERED PROFESSIONAL ENGINEER
RONALD E. GULLICKS
2890
DATE 1/10/2012
REV.5
NORTH DAKOTA

NOTES

1. SEE DRAWING S3000 FOR GENERAL NOTES, LEGEND AND ABBREVIATIONS.
2. ALL CONTOURS REPRESENT FINISHED GRADE UNLESS NOTED OTHERWISE.
3. SEE DRAWING S3911 FOR TYPICAL WTG LAYDOWN/ASSEMBLY AREA DETAILS.
4. SEE DRAWING S3912 FOR TYPICAL ROAD HORIZONTAL AND VERTICAL CURVE DETAILS.
5. SEE DRAWING S3901 FOR TYPICAL CULVERT AND RIPRAP DETAILS.

NO.	DATE	REVISION DESCRIPTION	BY	APPROVED
5	11-3-11	CONSTRUCTION REVISIONS, W.O.#17480	NJG	KEG
3	14/MAR/11	REVISED PER ECN N-S-0005	SMC	JMS
4	21/MAR/11	REVISED PER ECN N-S-0006	SMC	JMS

THIS DOCUMENT WAS ORIGINALLY ISSUED AND SEALED BY JULIE M STANEK, REGISTRATION NUMBER PE-6480 ON FEBRUARY 12, 2010 AND THE ORIGINAL DOCUMENTS ARE STORED WITH MINNESOTA POWER, AT 30 WEST SUPERIOR STREET, DULUTH, MN 55802.

BLACK & VEATCH CORPORATION

ENGINEER	RDN	DRAWN	PJK
CHECKED	JMS	DATE	07/JAN/10

B&V PROJECT DRAWING NUMBER

I HEREBY CERTIFY THAT THIS DOCUMENT WAS PREPARED BY ME OR UNDER MY DIRECT SUPERVISION AND THAT I AM A DULY REGISTERED PROFESSIONAL ENGINEER UNDER THE LAWS OF THE STATE OF NORTH DAKOTA.

SIGNED JULIE M. STANEK

DATE 12/FEB/10 REG. NO. PE-6480

minnesota power

BISON WIND GENERATING FACILITY NEW SALEM, ND

ROAD PLAN AND PROFILE
49TH AVE SW AND WTG-15 ACCESS RD
STA 26+00 TO 41+41.29

SHEET 1 REV. 5

165233-1STA-S3423

CADD DRAWING – FOR REPRODUCTION ONLY

SCALE:

MICROFILMED / /

CODE

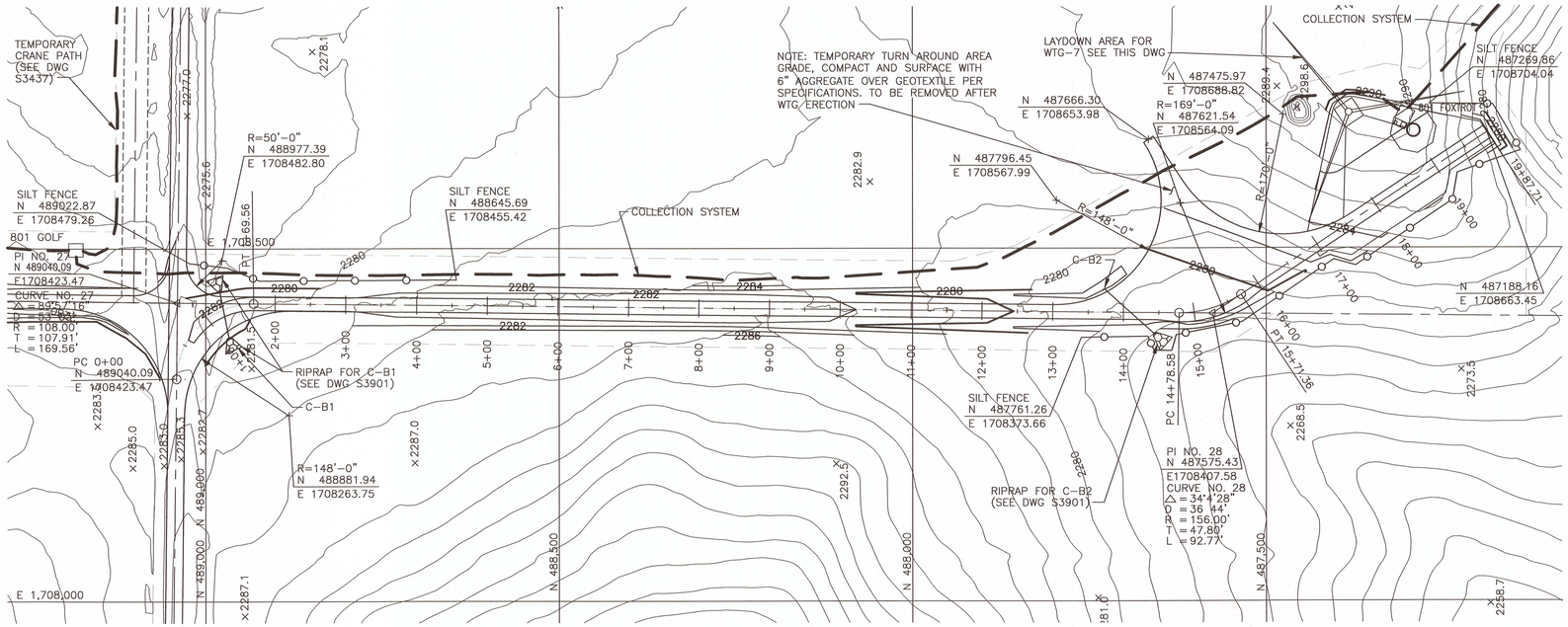

ROAD PLAN – WTG-7 ACCESS RD – STA 0+00 TO STA 19+87.71

SCALE: 1"=100'

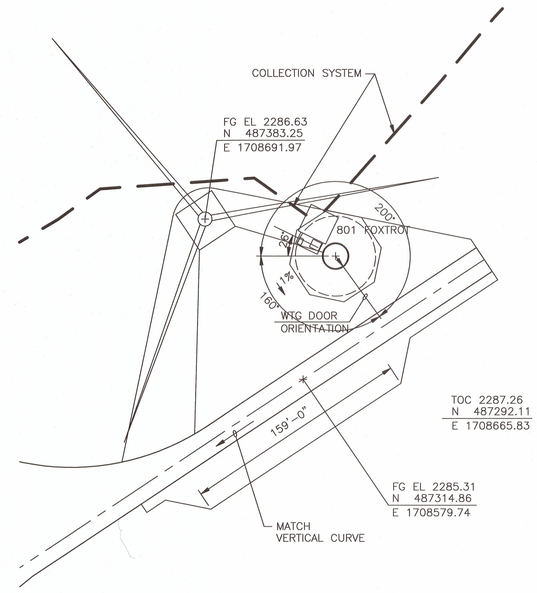

LAYDOWN AREA FOR WTG-7

50' 25' 0 50' 100'

1"=50'

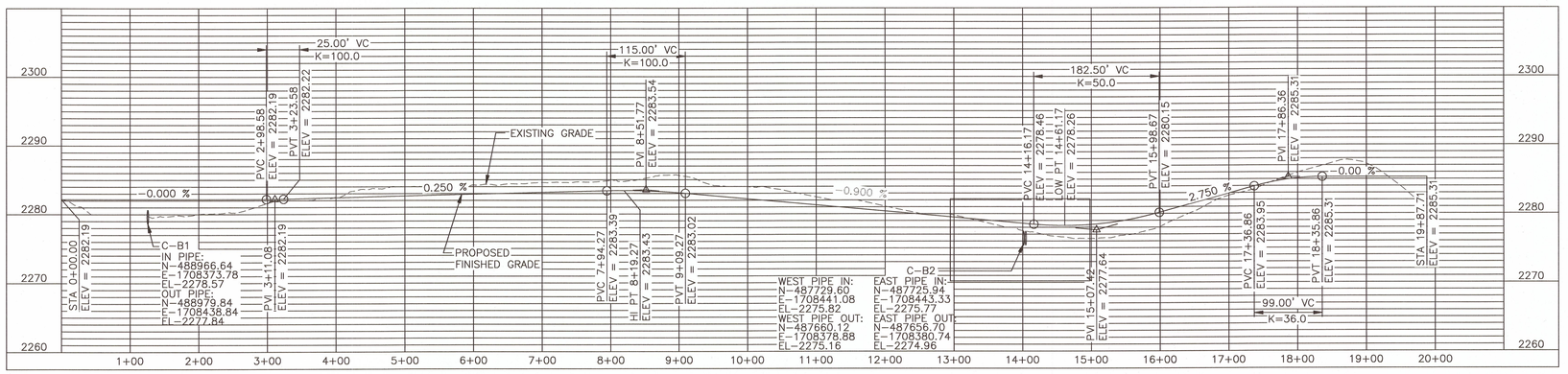

PROFILE – WTG-7 ACCESS RD – STA 0+00 TO STA 19+87.71

HORIZ SCALE: 1"=100'

VERT SCALE: 1"=10'

10' 0 10' 20'

1"=10'

100' 50' 0 100' 200'

1"=100'

NOTES

1. SEE DRAWING S3000 FOR GENERAL NOTES, LEGEND AND ABBREVIATIONS.
2. ALL CONTOURS REPRESENT FINISHED GRADE UNLESS NOTED OTHERWISE.
3. SEE DRAWING S3911 FOR TYPICAL WTG LAYDOWN/ASSEMBLY AREA DETAILS.
4. SEE DRAWING S3912 FOR TYPICAL ROAD HORIZONTAL AND VERTICAL CURVE DETAILS.
5. SEE DRAWING S3901 FOR TYPICAL CULVERT AND RIPRAP DETAILS.

REGISTERED PROFESSIONAL ENGINEER – RONALD E. GULLICKS 2890 – DATE 1/10/2012 – REV.5 – NORTH DAKOTA

NO.	DATE	REVISION DESCRIPTION	BY	APPROVED
5	11-18-11	CONSTRUCTION REVISIONS, W.O.#17480	NJG	RDG
3	14/MAR/11	REVISED PER ECN N-S-0005	SMC	JMS
4	21/MAR/11	REVISED PER ECN N-S-0006	SMC	JMS

THIS DOCUMENT WAS ORIGINALLY ISSUED AND SEALED BY JULIE M STANEK, REGISTRATION NUMBER PE-6480 ON FEBRUARY 12, 2010 AND THE ORIGINAL DOCUMENTS ARE STORED WITH MINNESOTA POWER, AT 30 WEST SUPERIOR STREET, DULUTH, MN 55802.

BLACK & VEATCH CORPORATION

ENGINEER	RDN	DRAWN	PJK
CHECKED	JMS	DATE	07/JAN/10
B&V PROJECT DRAWING NUMBER			

I HEREBY CERTIFY THAT THIS DOCUMENT WAS PREPARED BY ME OR UNDER MY DIRECT SUPERVISION AND THAT I AM A DULY REGISTERED PROFESSIONAL ENGINEER UNDER THE LAWS OF THE STATE OF NORTH DAKOTA (JULIE M. STANEK)

SIGNED @(@)JULIE M. STANEK

DATE 12/FEB/10 REGISTRATION NO. PE-6480

minnesota power

BISON WIND GENERATING FACILITY NEW SALEM, ND

ROAD PLAN AND PROFILE WTG-7 ACCESS RD STA 0+00 TO 19+87.71

SHEET 1 REV. 5

165233-1STA-S3424

CADD DRAWING – FOR REPRODUCTION ONLY

SCALE:

MICROFILMED / /

CODE

NOTES

1. SEE DRAWING S3000 FOR GENERAL NOTES, LEGEND AND ABBREVIATIONS.
2. ALL CONTOURS REPRESENT FINISHED GRADE UNLESS NOTED OTHERWISE.
3. SEE DRAWING S3911 FOR TYPICAL WTG LAYDOWN/ASSEMBLY AREA DETAILS.
4. SEE DRAWING S3912 FOR TYPICAL ROAD HORIZONTAL AND VERTICAL CURVE DETAILS.

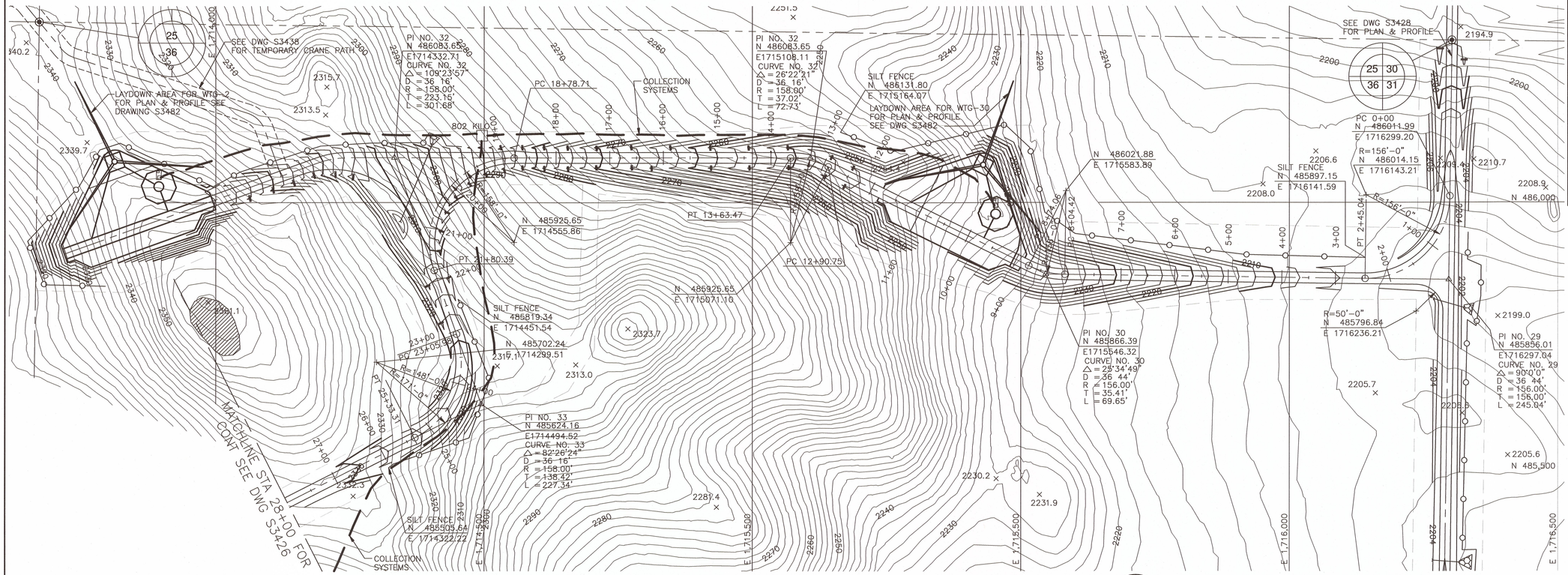

ROAD PLAN – WTG-30, 10 & 27 ACCESS RD – STA 0+00 TO STA 28+00
SCALE: 1"=100'

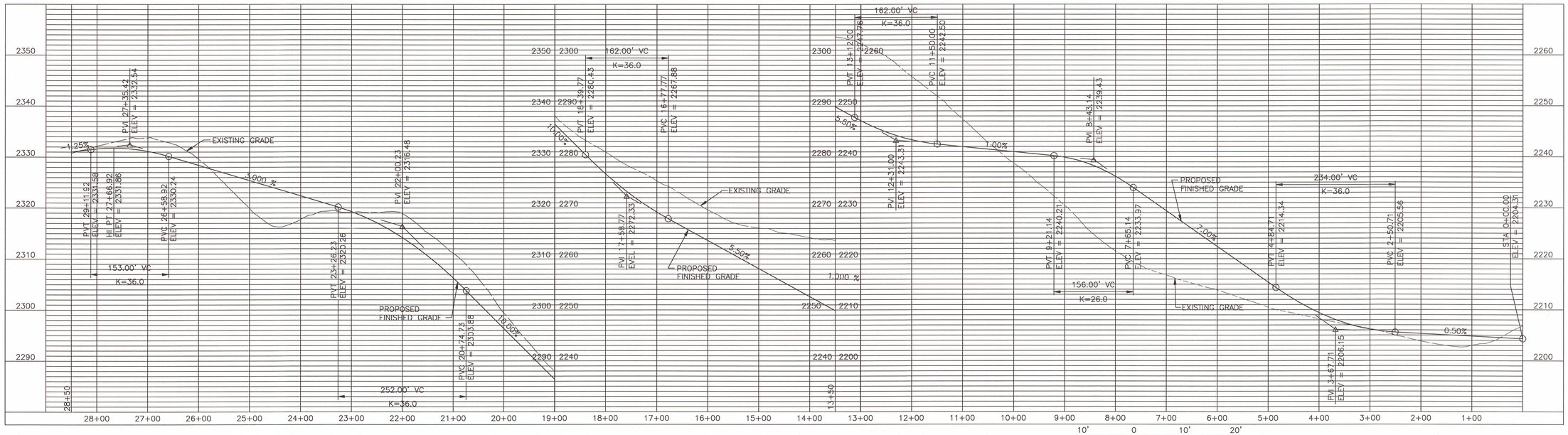

PROFILE – WTG-30, 10 & 27 ACCESS RD – STA 0+00 TO STA 28+50
HORIZ SCALE: 1"=100'
VERT SCALE: 1"=10'

10' 0 10' 20'
1"=10'
100' 50' 0 100' 200'
1"=100'

REGISTERED PROFESSIONAL ENGINEER
RONALD E. GULLICKS
2890
DATE 1/12/2012
REV.4
NORTH DAKOTA

NO.	DATE	REVISION DESCRIPTION	BY	APPROVED
2	27/MAY/10	REVISED PER ECN N-S-0003	RDN	JMS
4	11-18-11	CONSTRUCTION REVISIONS, W.O.#17480 NO CHANGES	NJG	
3	14/MAR/11	REVISED PER ECN N-S-0005	SMC	JMS

THIS DOCUMENT WAS ORIGINALLY ISSUED AND SEALED BY JULIE M STANEK, REGISTRATION NUMBER PE-6480 ON FEBRUARY 12, 2010 AND THE ORIGINAL DOCUMENTS ARE STORED WITH MINNESOTA POWER, AT 30 WEST SUPERIOR STREET, DULUTH, MN 55802.

BLACK & VEATCH CORPORATION

ENGINEER	RDN	DRAWN	PJK
CHECKED	JMS	DATE	07/JAN/10
B&V PROJECT DRAWING NUMBER			

I HEREBY CERTIFY THAT THIS DOCUMENT WAS PREPARED BY ME OR UNDER MY DIRECT SUPERVISION AND THAT I AM A DULY REGISTERED PROFESSIONAL ENGINEER UNDER THE LAWS OF THE STATE OF NORTH DAKOTA.
SIGNED JULIE M STANEK
DATE 14/MAR/11 LICENSE NO. PE-6480

minnesota power

BISON WIND GENERATING FACILITY NEW SALEM, ND

ROAD PLAN & PROFILE WTG-30, 10 & 27 ACCESS RD STA 0+00 TO 28+00

SHEET 1 REV. 4

165233-1STA-S3425

CADD DRAWING – FOR REPRODUCTION ONLY

SCALE:

MICROFILMED / /

CODE

NOTES

1. SEE DRAWING S3000 FOR GENERAL NOTES, LEGEND AND ABBREVIATIONS.
2. ALL CONTOURS REPRESENT FINISHED GRADE UNLESS NOTED OTHERWISE.
3. SEE DRAWING S3911 FOR TYPICAL WTG LAYDOWN/ASSEMBLY AREA DETAILS.
4. SEE DRAWING S3912 FOR TYPICAL ROAD HORIZONTAL AND VERTICAL CURVE DETAILS.

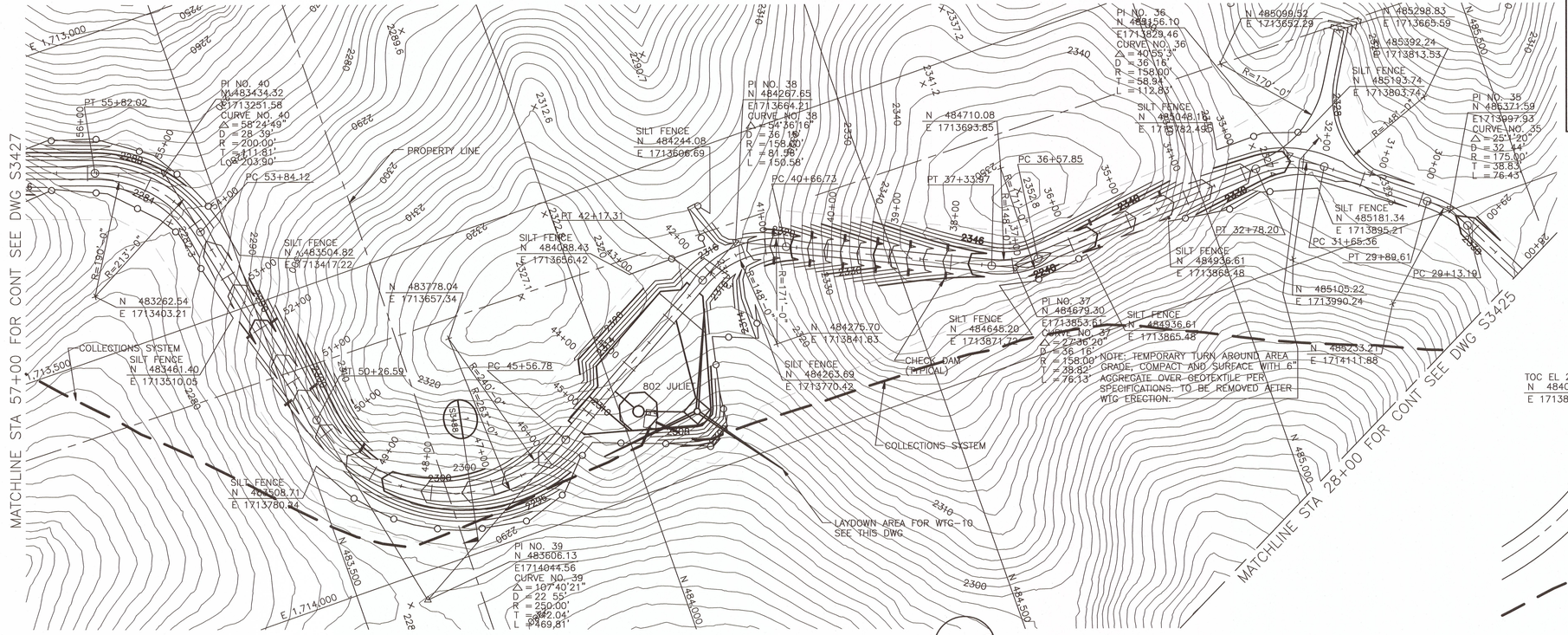

ROAD PLAN – WTG-30, 10 & 27 ACCESS RD – STA 28+00 TO STA 57+00
SCALE: 1"=100'

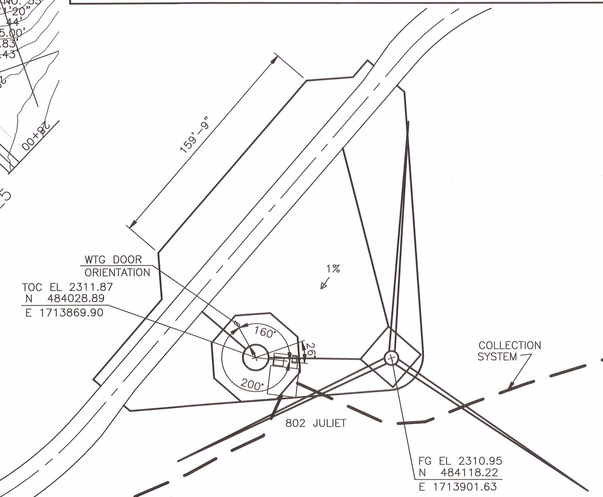

LAYDOWN AREA FOR WTG-10
SCALE: 1"=50'

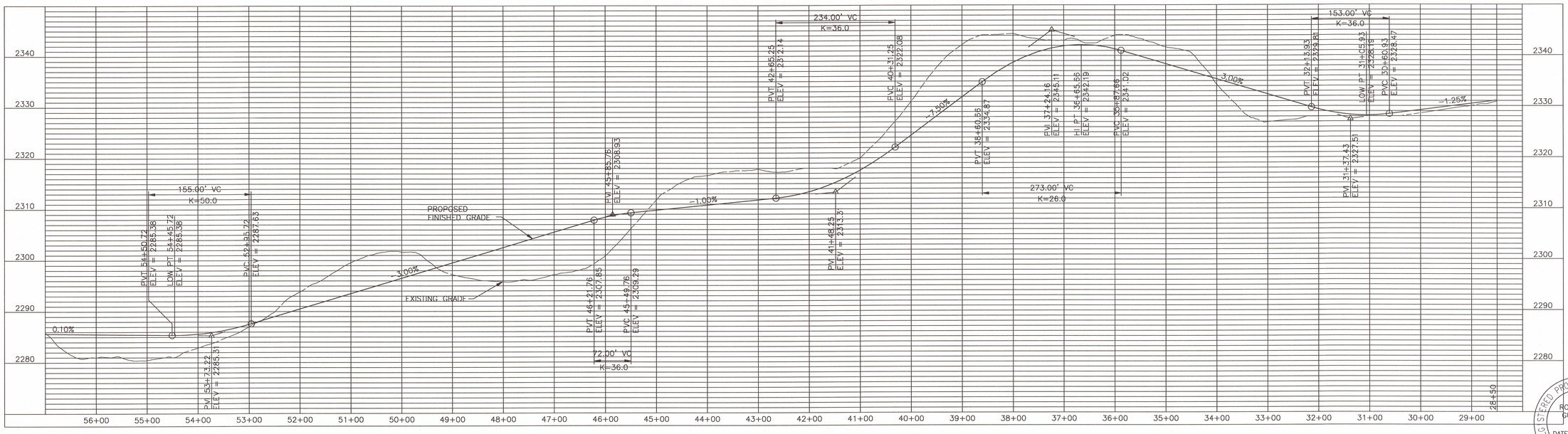

PROFILE – WTG-30, 10 & 27 ACCESS RD – STA 28+50 TO STA 57+00
HORIZ SCALE: 1"=100'
VERT SCALE: 1"=10'

100' 50' 0 100' 200'
1"=100'

50' 25' 0 50' 100'
1"=50'

NO.	DATE	REVISION DESCRIPTION	BY	APPROVED
2	27/MAY/10	REVISED PER ECN N-S-0003	RDN	JMS
4	11-18-11	CONSTRUCTION REVISIONS, W.O.#17480	NJG	
3	14/MAR/11	REVISED PER ECN N-S-0005	SMC	JMS

THIS DOCUMENT WAS ORIGINALLY ISSUED AND SEALED BY JULIE M STANEK, REGISTRATION NUMBER PE-6480 ON FEBRUARY 12, 2010 AND THE ORIGINAL DOCUMENTS ARE STORED WITH MINNESOTA POWER, AT 30 WEST SUPERIOR STREET, DULUTH, MN 55802.

BLACK & VEATCH CORPORATION
ENGINEER RDN | DRAWN PJK
CHECKED JMS | DATE 07/JAN/10
B&V PROJECT DRAWING NUMBER

I HEREBY CERTIFY THAT THIS DOCUMENT WAS PREPARED BY ME OR UNDER MY DIRECT SUPERVISION AND THAT I AM A DULY REGISTERED PROFESSIONAL ENGINEER UNDER THE LAWS OF THE STATE OF NORTH DAKOTA.
SIGNED JULIE M STANEK
DATE 14/MAR/11 LICENSE NO. PE-6480

minnesota power

BISON WIND GENERATING FACILITY NEW SALEM, ND

ROAD PLAN & PROFILE
WTG-30, 10, & 27 ACCESS RD
STATION 28+00 TO 57+00

SHEET 1 | REV. 4
165233-1STA-S3426

REGISTERED PROFESSIONAL ENGINEER
RONALD E. GULLICKS
2890
DATE 1/10/2012
REV. 4
NORTH DAKOTA

CADD DRAWING – FOR REPRODUCTION ONLY

SCALE:

MICROFILMED / /

CODE

NOTES

1. SEE DRAWING S3000 FOR GENERAL NOTES, LEGEND AND ABBREVIATIONS.
2. ALL CONTOURS REPRESENT FINISHED GRADE UNLESS NOTED OTHERWISE.
3. SEE DRAWING S3911 FOR TYPICAL WTG LAYDOWN/ASSEMBLY AREA DETAILS.
4. SEE DRAWING S3912 FOR TYPICAL ROAD HORIZONTAL AND VERTICAL CURVE DETAILS.
5. SEE DRAWING S3901 FOR TYPICAL CULVERT AND RIPRAP DETAILS.

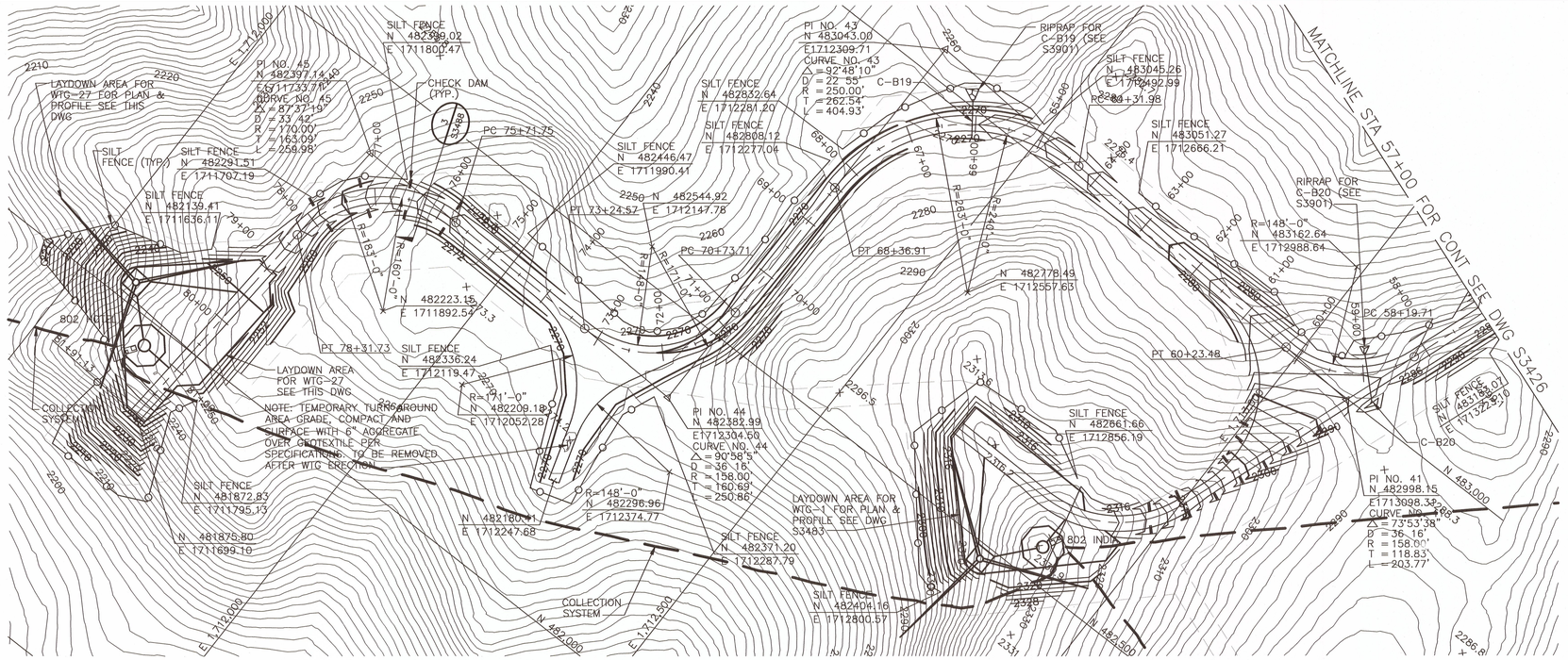

ROAD PLAN – WTG-30, 10 & 27 ACCESS RD – STA 57+00 TO STA 81+91.13
SCALE: 1"=100'

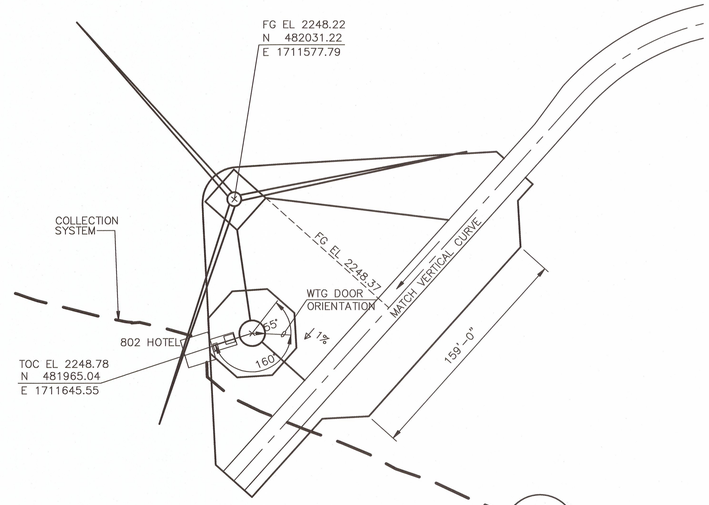

LAYDOWN AREA FOR WTG-27
SCALE: 1"=50'

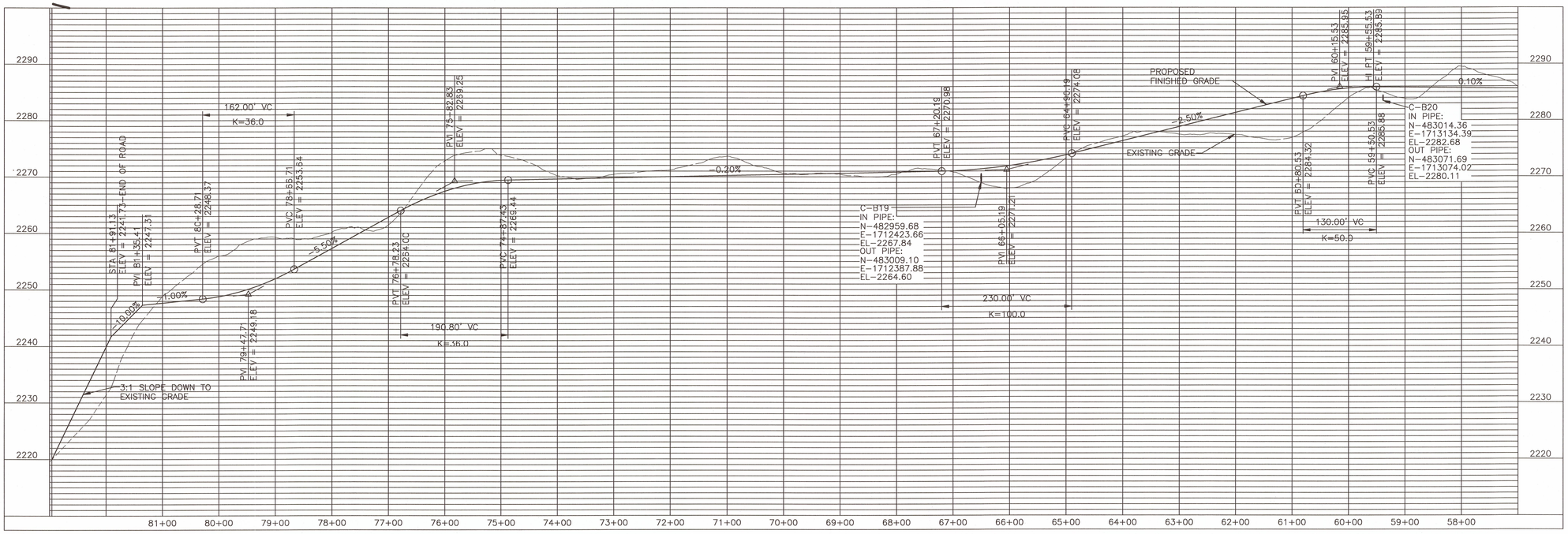

PROFILE – WTG-30, 10 & 27 ACCESS RD – STA 57+00 TO STA 81+91.13
HORIZ SCALE: 1"=100'
VERT SCALE: 1"=10'

100' 50' 0 100' 200'
1"=100'

50' 25' 0 50' 100'
1"=50'

NO.	DATE	REVISION DESCRIPTION	BY	APPROVED
2	14/MAR/11	REVISED PER ECN N-S-0005	SMC	JMS
1	12/FEB/10	APPROVED FOR CONSTRUCTION	RDN	JMS
3	11-18-11	CONSTRUCTION REVISIONS, W.O.#17480	NJG	REV

THIS DOCUMENT WAS ORIGINALLY ISSUED AND SEALED BY JULIE M STANEK, REGISTRATION NUMBER PE-6480 ON FEBRUARY 12, 2010 AND THE ORIGINAL DOCUMENTS ARE STORED WITH MINNESOTA POWER, AT 30 WEST SUPERIOR STREET, DULUTH, MN 55802.

BLACK & VEATCH CORPORATION

ENGINEER	14/MAR/11	DRAWN	PJK
CHECKED	JMS	DATE	07/JAN/10
B&V PROJECT DRAWING NUMBER			

I HEREBY CERTIFY THAT THIS DOCUMENT WAS PREPARED BY ME OR UNDER MY DIRECT SUPERVISION AND THAT I AM A DULY REGISTERED PROFESSIONAL ENGINEER UNDER THE LAWS OF THE STATE OF NORTH DAKOTA

SIGNED (ORIGINAL SIGNATURE) JULIE M STANEK
DATE 12/FEB/10 ORIG NO. PE-6480

minnesota power

BISON WIND GENERATING FACILITY NEW SALEM, ND

ROAD PLAN & PROFILE WTG 30, 10 & 27 ACCESS RD STATION 57+00 TO 81+91.13

SHEET 1 REV. 3

165233-1STA-S3427

CADD DRAWING – FOR REPRODUCTION ONLY

SCALE:

MICROFILMED / /

CODE

REGISTERED PROFESSIONAL ENGINEER
RONALD E. GULLICKS
2890
DATE 1/10/2012
REV.3
NORTH DAKOTA

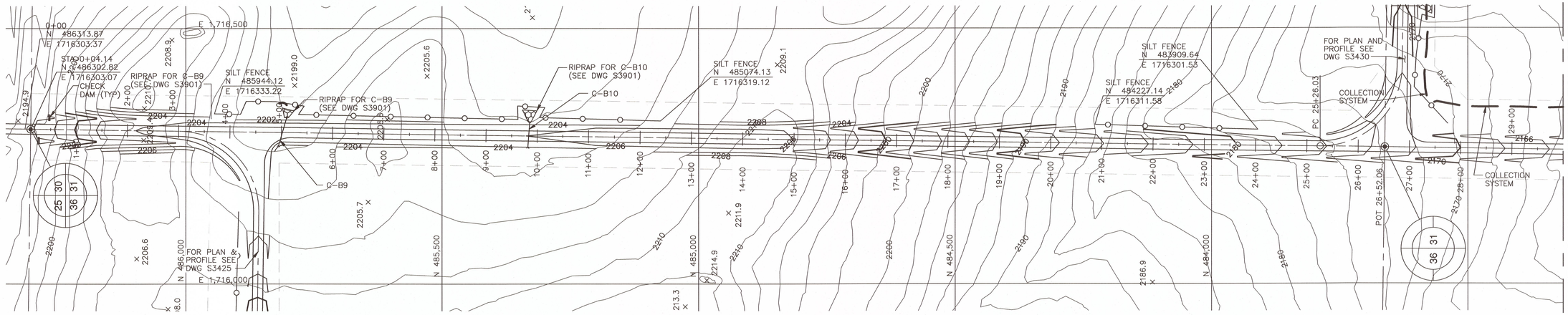

ROAD PLAN – 48TH AVE & WTG-9 ACCESS RD – STA 0+00 TO STA 30+00

SCALE: 1"=100'

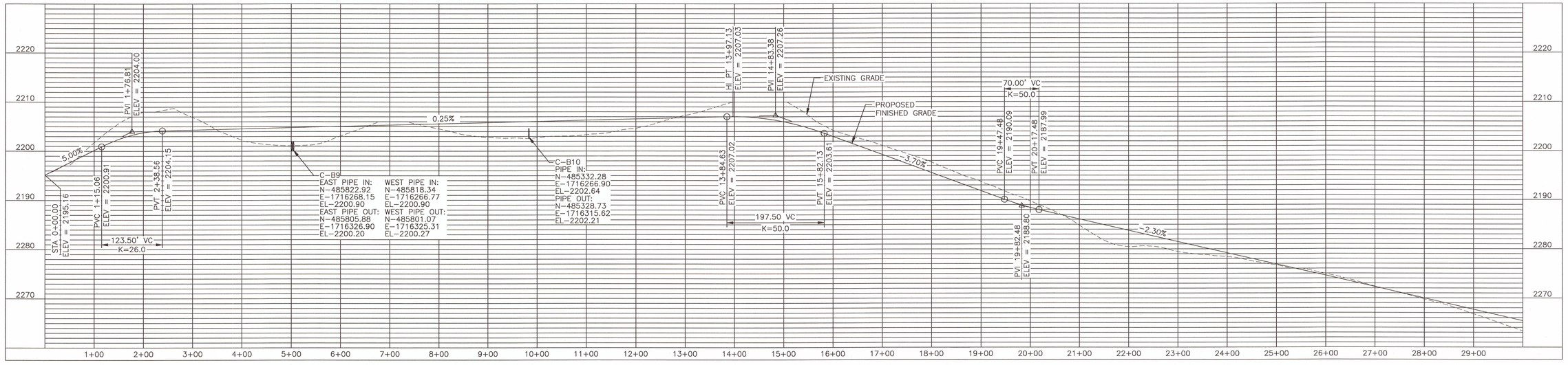

PROFILE – 48TH AVE & WTG-9 ACCESS RD – STA 0+00 TO STA 30+00

HORIZ SCALE: 1"=100'

VERT SCALE: 1"=10'

10' 0 10' 20'

1"=10'

100' 50' 0 100' 200'

1"=100'

NOTES

1. SEE DRAWING S3000 FOR GENERAL NOTES, LEGEND AND ABBREVIATIONS.
2. ALL CONTOURS REPRESENT FINISHED GRADE UNLESS NOTED OTHERWISE.
3. SEE DRAWING S3912 FOR TYPICAL ROAD HORIZONTAL AND VERTICAL CURVE DETAILS.

REGISTERED PROFESSIONAL ENGINEER
RONALD E. GULLICKS
2890
DATE 1/10/2011
REV.3
NORTH DAKOTA

NO.	DATE	REVISION DESCRIPTION	BY	APPROVED
2	14/MAR/11	REVISED PER ECN N-S-0005	SMC	JMS
1	12/FEB/10	APPROVED FOR CONSTRUCTION	RDN	JMS
3	11-18-11	CONSTRUCTION REVISIONS, W.O.#17480	NJG	

THIS DOCUMENT WAS ORIGINALLY ISSUED AND SEALED BY JULIE M STANEK, REGISTRATION NUMBER PE-6480 ON FEBRUARY 12, 2010 AND THE ORIGINAL DOCUMENTS ARE STORED WITH MINNESOTA POWER, AT 30 WEST SUPERIOR STREET, DULUTH, MN 55802.

BLACK & VEATCH CORPORATION

ENGINEER	RDN	DRAWN	PJK
CHECKED	JMS	DATE	07/JAN/10
B&V PROJECT DRAWING NUMBER			

I HEREBY CERTIFY THAT THIS DOCUMENT WAS PREPARED BY ME OR UNDER MY DIRECT SUPERVISION AND THAT I AM A DULY REGISTERED PROFESSIONAL ENGINEER UNDER THE LAWS OF THE STATE OF NORTH DAKOTA.

SIGNED JULIE M STANEK

DATE 14/MAR/11 REG. NO. PE-6480

minnesota power

BISON WIND GENERATING FACILITY NEW SALEM, ND

ROAD PLAN AND PROFILE
48TH AVE AND WTG-9 ACCESS RD
STA 0+00 TO 30+00

SHEET 1 REV. 3

165233-1STA-S3428

CADD DRAWING – FOR REPRODUCTION ONLY

SCALE:

MICROFILMED / /

CODE

NOTES

1. SEE DRAWING S3000 FOR GENERAL NOTES, LEGEND AND ABBREVIATIONS.
2. ALL CONTOURS REPRESENT FINISHED GRADE UNLESS NOTED OTHERWISE.
3. SEE DRAWING S3911 FOR TYPICAL WTG LAYDOWN/ASSEMBLY AREA DETAILS.
4. SEE DRAWING S3912 FOR TYPICAL ROAD HORIZONTAL AND VERTICAL CURVE DETAILS.
5. SEE DRAWING S3901 FOR TYPICAL CULVERT AND RIPRAP DETAILS.

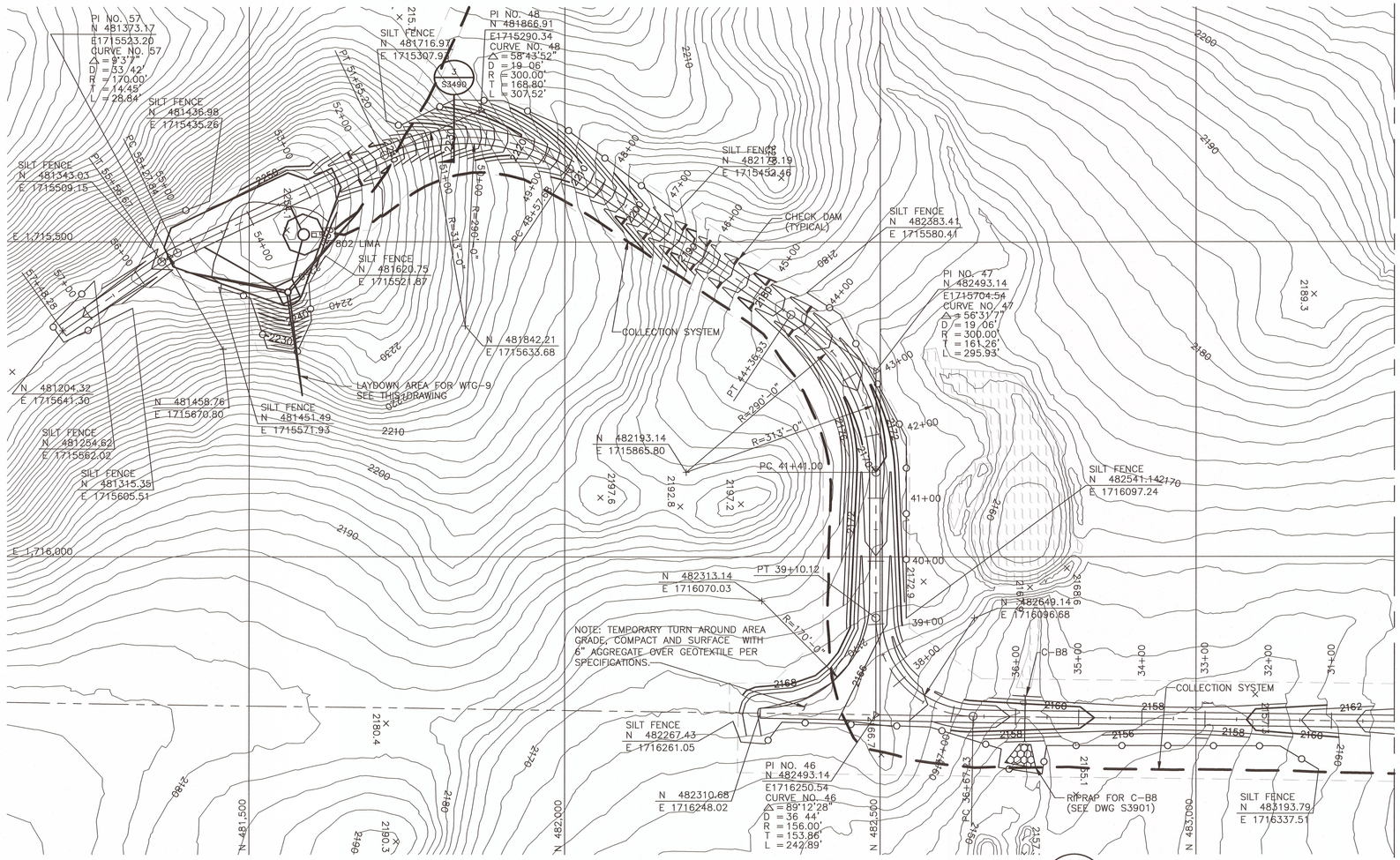

ROAD PLAN – 48TH AVE & WTG-9 ACCESS RD – STA 30+00 TO STA 57+48.28
SCALE: 1"=100'

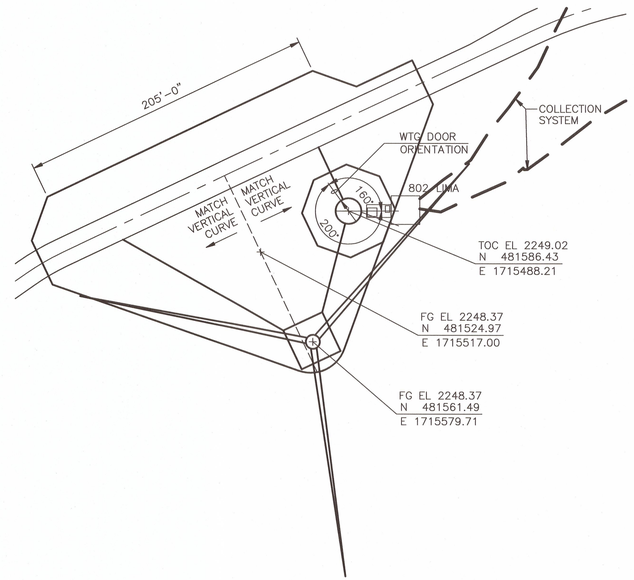

LAYDOWN AREA FOR WTG-9
SCALE: 1"=50'

50' 25' 0 50' 100'
1"=50'

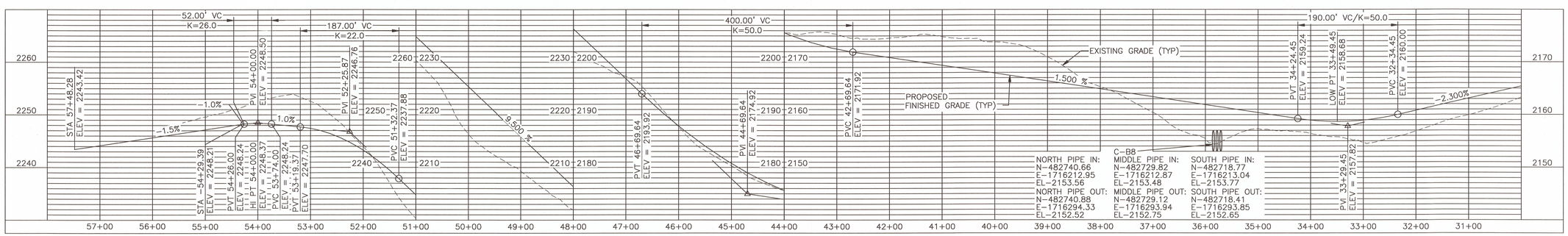

REGISTERED PROFESSIONAL ENGINEER
RONALD E. GULLICKS
2890
DATE 1/6/2012
REV.3
NORTH DAKOTA

10' 0 10' 20'
1"=10'

100' 50' 0 100' 200'
1"=100'

PROFILE – 48TH AVE & WTG-9 ACCESS RD – STA 30+00 TO STA 57+48.28
HORIZ SCALE: 1"=100'
VERT SCALE: 1"=10'

NO.	DATE	REVISION DESCRIPTION	BY	APPROVED
2	14/MAR/11	REVISED PER ECN N-S-0005	SMC	JMS
1	12/FEB/10	APPROVED FOR CONSTRUCTION	RDN	JMS
3	11-18-11	CONSTRUCTION REVISIONS, W.O.#17480	NJG	

THIS DOCUMENT WAS ORIGINALLY ISSUED AND SEALED BY JULIE M STANEK, REGISTRATION NUMBER PE-6480 ON FEBRUARY 12, 2010 AND THE ORIGINAL DOCUMENTS ARE STORED WITH MINNESOTA POWER, AT 30 WEST SUPERIOR STREET, DULUTH, MN 55802.

BLACK & VEATCH CORPORATION
ENGINEER RDN | DRAWN PJK
CHECKED JMS | DATE 07/JAN/10
B&V PROJECT DRAWING NUMBER

I HEREBY CERTIFY THAT THIS DOCUMENT WAS PREPARED BY ME OR UNDER MY DIRECT SUPERVISION AND THAT I AM A DULY REGISTERED PROFESSIONAL ENGINEER UNDER THE LAWS OF THE STATE OF NORTH DAKOTA
SIGNED JULIE M STANEK
DATE 14/MAR/11 REGISTRATION NO. PE-6480

minnesota power

BISON WIND GENERATING FACILITY NEW SALEM, ND

ROAD PLAN AND PROFILE 48TH AVE AND WTG-9 ACCESS RD STA 30+00 TO 57+48.28

SHEET 1 REV. 3
165233-1STA-S3429

CADD DRAWING – FOR REPRODUCTION ONLY
SCALE:
MICROFILMED / /
CODE

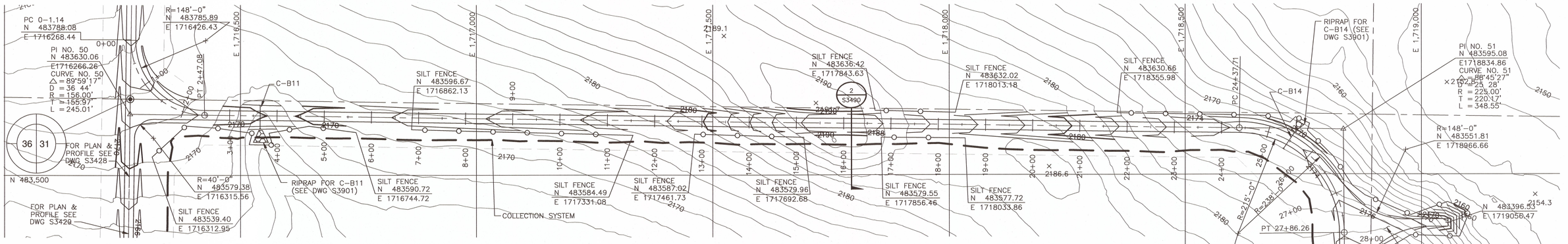

ROAD PLAN – WTG-11 ACCESS RD – STA 0+00 TO STA 31+68.35

SCALE: 1"=100'

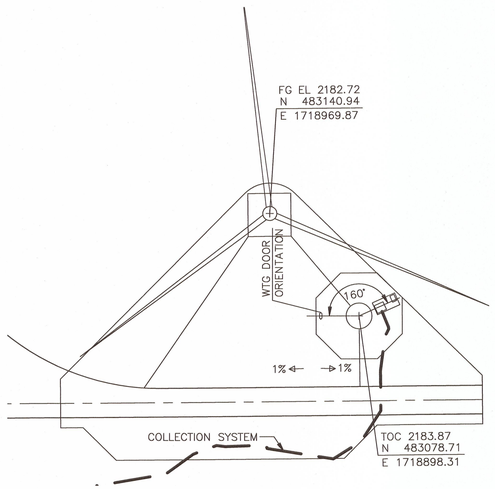

LAYDOWN AREA WTG-11

SCALE: 1"=50'

50' 25' 0 50' 100'

1"=50'

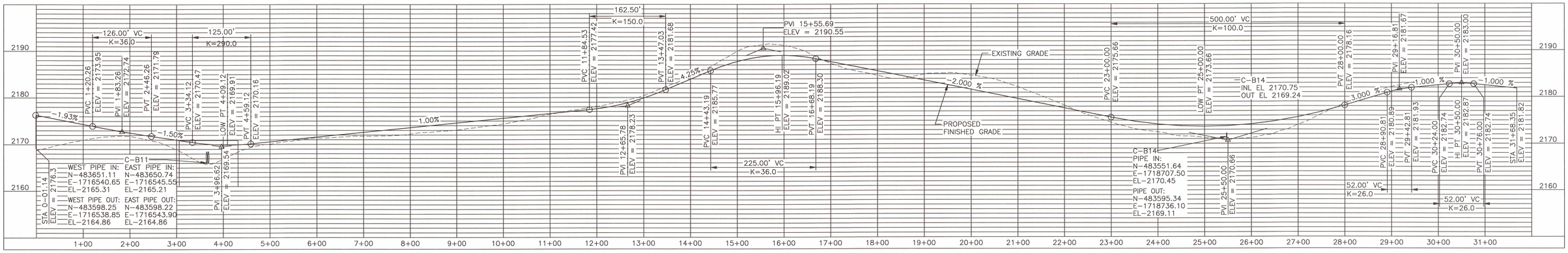

PROFILE – WTG-11 ACCESS RD – STA 0+00 TO STA 31+68.35

HORIZ SCALE: 1"=100'
VERT SCALE: 1"=10'

10' 0 10' 20'

1"=10'

100' 50' 0 100' 200'

1"=100'

NOTES

1. SEE DRAWING S3000 FOR GENERAL NOTES, LEGEND AND ABBREVIATIONS.
2. ALL CONTOURS REPRESENT FINISHED GRADE UNLESS NOTED OTHERWISE.
3. SEE DRAWING S3911 FOR TYPICAL WTG LAYDOWN/ASSEMBLY AREA DETAILS.
4. SEE DRAWING S3912 FOR TYPICAL ROAD HORIZONTAL AND VERTICAL CURVE DETAILS.
5. SEE DRAWING S3901 FOR TYPICAL CULVERT AND RIPRAP DETAILS.

REGISTERED PROFESSIONAL ENGINEER
RONALD E. GULLICKS
2890
DATE 1/10/2011
REV.4
NORTH DAKOTA

NO.	DATE	REVISION DESCRIPTION	BY	APPROVED
3	21/MAR/11	REVISED PER ECN N-S-0006	SMC	JMS
2	14/MAR/11	REVISED PER ECN N-S-0005	SMC	JMS
4	11-18-11	CONSTRUCTION REVISIONS, W.O.#17480	NJG	

THIS DOCUMENT WAS ORIGINALLY ISSUED AND SEALED BY JULIE M STANEK, REGISTRATION NUMBER PE-6480 ON FEBRUARY 12, 2010 AND THE ORIGINAL DOCUMENTS ARE STORED WITH MINNESOTA POWER, AT 30 WEST SUPERIOR STREET, DULUTH, MN 55802.

BLACK & VEATCH CORPORATION

ENGINEER	RDN	DRAWN	PJK
CHECKED	JMS	DATE	07/JAN/10
B&V PROJECT DRAWING NUMBER			

I HEREBY CERTIFY THAT THIS DOCUMENT WAS PREPARED BY ME OR UNDER MY DIRECT SUPERVISION AND THAT I AM A DULY REGISTERED PROFESSIONAL ENGINEER UNDER THE LAWS OF THE STATE OF NORTH DAKOTA.

SIGNED JULIE M. STANEK
DATE 12/FEB/10 REG. NO. PE-6480

minnesota power

BISON WIND GENERATING FACILITY NEW SALEM, ND

ROAD PLAN AND PROFILE
WTG-11 ACCESS RD
STA 0+00 TO 31+68.35

SHEET 1 REV. 4

165233-1STA-S3430

CADD DRAWING – FOR REPRODUCTION ONLY

SCALE:

MICROFILMED / /

CODE

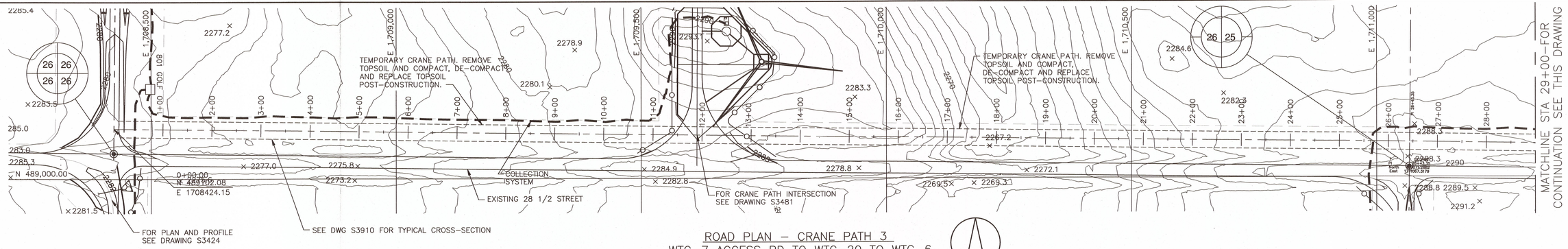

ROAD PLAN – CRANE PATH 3
WTG-7 ACCESS RD TO WTG-20 TO WTG-6
STA 0+00 TO STA 29+00
SCALE: 1"=100'

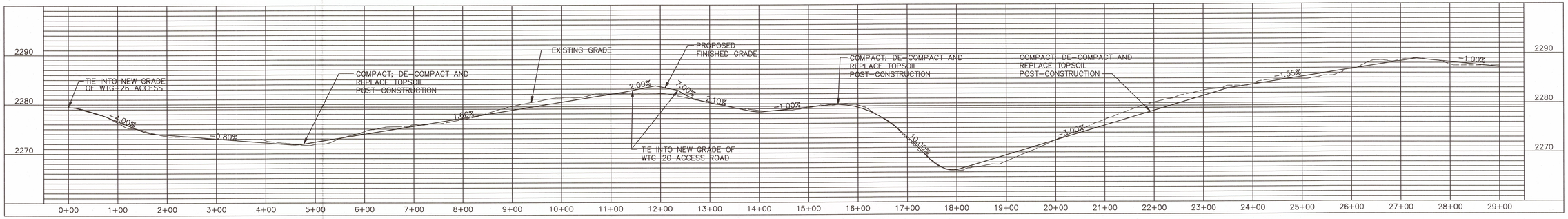

ROAD PLAN – CRANE PATH 3
WTG-7 ACCESS RD TO WTG-6
STA 0+00 TO STA 29+00
HORIZ SCALE: 1"=100'
VERT SCALE: 1"=10'

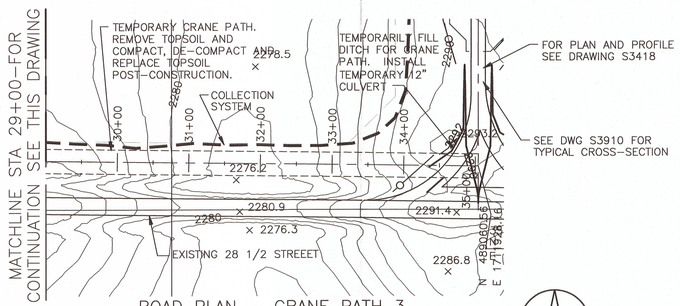

ROAD PLAN – CRANE PATH 3
WTG-7 ACCESS RD TO WTG-20 TO WTG-6
STA 29+00 TO STA 35+04.26
SCALE: 1"=100'

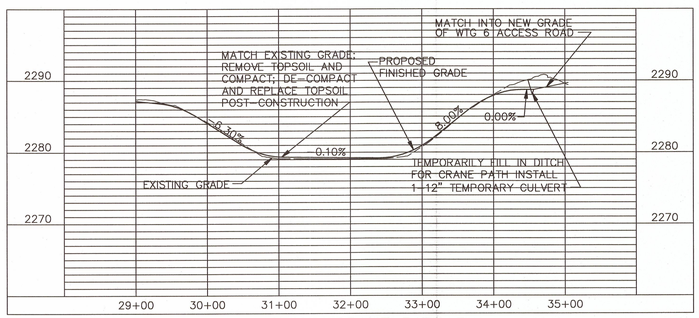

ROAD PLAN – CRANE PATH 3
WTG-7 ACCESS RD TO WTG-20 TO WTG-6
STA 29+00 TO STA 35+04.26
HORIZ SCALE: 1"=100'
HORIZ SCALE: 1"=10'

10' 0 10' 20'
1"=10'

100' 50' 0 100' 200'
1"=100'

NOTES

1. SEE DRAWING S3000 FOR GENERAL NOTES, LEGEND AND ABBREVIATIONS.
2. ALL CONTOURS REPRESENT FINISHED GRADE UNLESS NOTED OTHERWISE.
3. SEE DRAWING S3901 FOR TYPICAL CULVERT AND RIPRAP DETAILS.

REGISTERED PROFESSIONAL ENGINEER
RONALD E. GULLICKS
2890
DATE 1/10/2012
REV.4
NORTH DAKOTA

NO.	DATE	REVISION DESCRIPTION	BY	APPROVED
2	27/MAY/10	REVISED PER ECN N-S-0003	RDN	JMS
4	11-18-11	CONSTRUCTION REVISIONS, W.O.#17480 NO CHANGES	NJG	
3	14/MAR/11	REVISED PER ECN N-S-0005	SMC	JMS

THIS DOCUMENT WAS ORIGINALLY ISSUED AND SEALED BY JULIE M STANEK, REGISTRATION NUMBER PE-6480 ON FEBRUARY 12, 2010 AND THE ORIGINAL DOCUMENTS ARE STORED WITH MINNESOTA POWER, AT 30 WEST SUPERIOR STREET, DULUTH, MN 55802.

BLACK & VEATCH CORPORATION

ENGINEER	RDN	DRAWN	PJK
CHECKED	JMS	DATE	07/JAN/10
B&V PROJECT DRAWING NUMBER			

I HEREBY CERTIFY THAT THIS DOCUMENT WAS PREPARED BY ME OR UNDER MY DIRECT SUPERVISION AND THAT I AM A DULY REGISTERED PROFESSIONAL ENGINEER UNDER THE LAWS OF THE STATE OF NORTH DAKOTA

SIGNED ORIGINAL SIGNED BY JULIE M STANEK
DATE 14/MAR/11 REGISTRATION NO. PE-6480

minnesota power

BISON WIND GENERATING FACILITY NEW SALEM, ND

ROAD PLAN AND PROFILE
CRANE PATH 3
STA 0+00 TO STA 35+04.26

SHEET 1 REV. 4

165233-1STA-S3437

CADD DRAWING – FOR REPRODUCTION ONLY

SCALE:

MICROFILMED / /

CODE

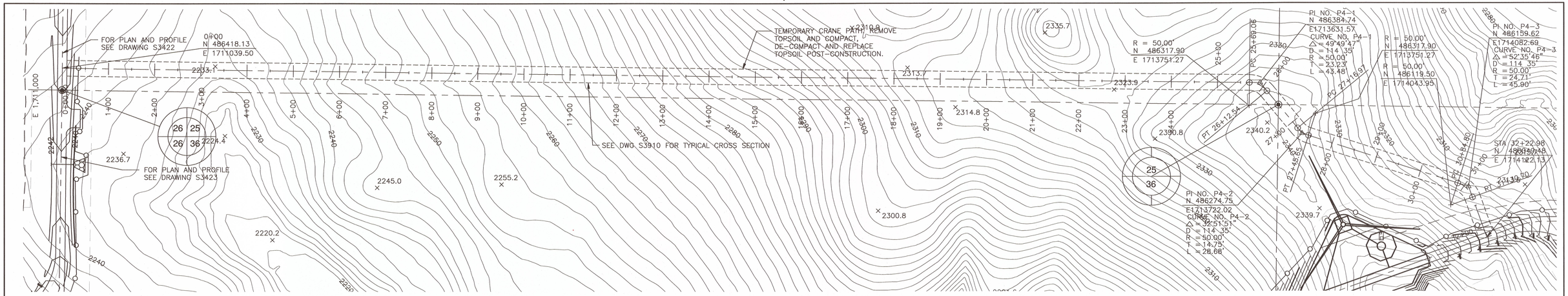

ROAD PLAN – CRANE PATH 4
WTG–28 ACCESS RD TO WTG–2 TEMPORARY CRANE PATH
STA 0+00 TO STA 24+00

SCALE: 1"=100'

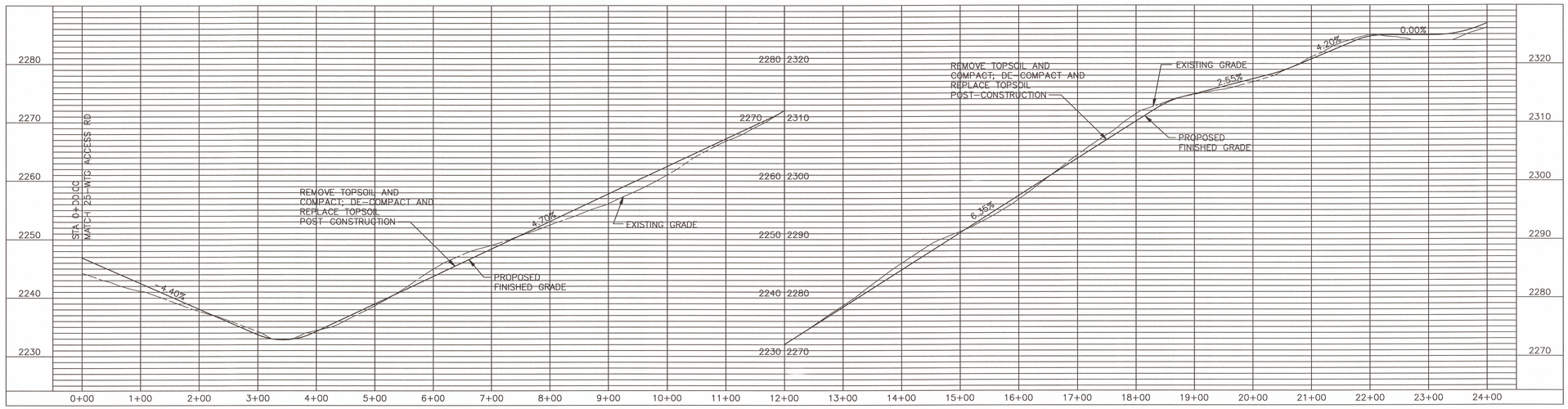

ROAD PLAN – CRANE PATH 4
WTG–28 ACCESS RD TO WTG–2 TEMPORARY CRANE PATH
STA 0+00 TO STA 24+00

HORIZ SCALE: 1"=100'
VERT SCALE: 1"=10'

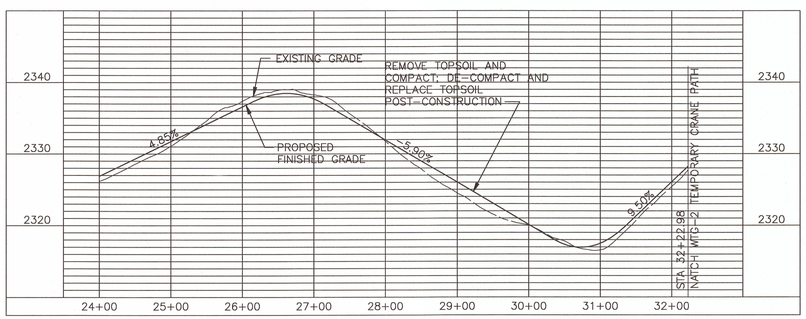

ROAD PLAN – CRANE PATH 4
WTG–25 ACCESS RD TO WTG–2 TEMPORARY CRANE PATH
STA 24+00 TO STA 32+22.98

HORIZ SCALE: 1"=100'
VERT SCALE: 1"=10'

10' 0 10' 20'
1"=10'

100' 50' 0 100' 200'
1"=100'

NOTES

1. SEE DRAWING S3000 FOR GENERAL NOTES, LEGEND AND ABBREVIATIONS.
2. ALL CONTOURS REPRESENT FINISHED GRADE UNLESS NOTED OTHERWISE.
3. SEE DRAWING S3901 FOR TYPICAL CULVERT AND RIPRAP DETAILS.

REGISTERED PROFESSIONAL ENGINEER
RONALD E. GULLICKS
2890
DATE 1/10/2012
REV.1
NORTH DAKOTA

NO.	DATE	REVISION DESCRIPTION	BY	APPROVED
1	12-1-11	CONSTRUCTION REVISIONS, W.O.#17480 NO CHANGES	NJG	EBV
0	14/MAR/11	ISSUED FOR CONSTRUCTION	SMC	JMS

THIS DOCUMENT WAS ORIGINALLY ISSUED AND SEALED BY JULIE M STANEK, REGISTRATION NUMBER PE-6480 ON MARCH 9, 2011 AND THE ORIGINAL DOCUMENTS ARE STORED WITH MINNESOTA POWER, AT 30 WEST SUPERIOR STREET, DULUTH, MN 55802.

BLACK & VEATCH CORPORATION

ENGINEER	RDH	DRAWN	PJK
CHECKED	JMS	DATE	07/JAN/10

B&V PROJECT DRAWING NUMBER

I HEREBY CERTIFY THAT THIS DOCUMENT WAS PREPARED BY ME OR UNDER MY DIRECT SUPERVISION AND THAT I AM A DULY REGISTERED PROFESSIONAL ENGINEER UNDER THE LAWS OF THE STATE OF NORTH DAKOTA.
SIGNED JULIE M STANEK
DATE 14/MAR/11 REGD NO. PE-6480

minnesota power

BISON WIND GENERATING FACILITY
NEW SALEM, ND

ROAD PLAN AND PROFILE
CRANE PATH 4
STA 0+00 TO STA 32+22.98

SHEET 1 REV. 1
165233-1STA-S3438

CADD DRAWING – FOR REPRODUCTION ONLY

SCALE:

MICROFILMED / /

CODE

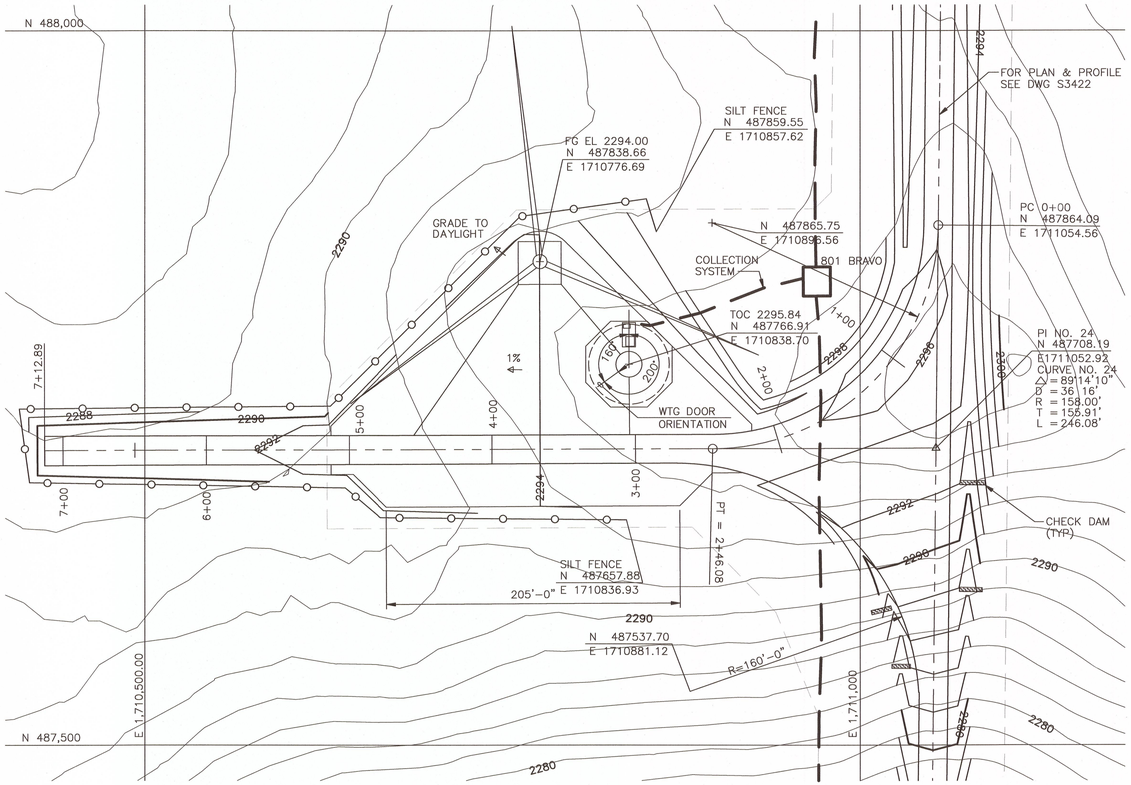

ROAD PLAN – WTG 28 ACCESS RD – STA 0+00 TO STA 7+12.89

SCALE: 1"=50'
SEE DWG S3422

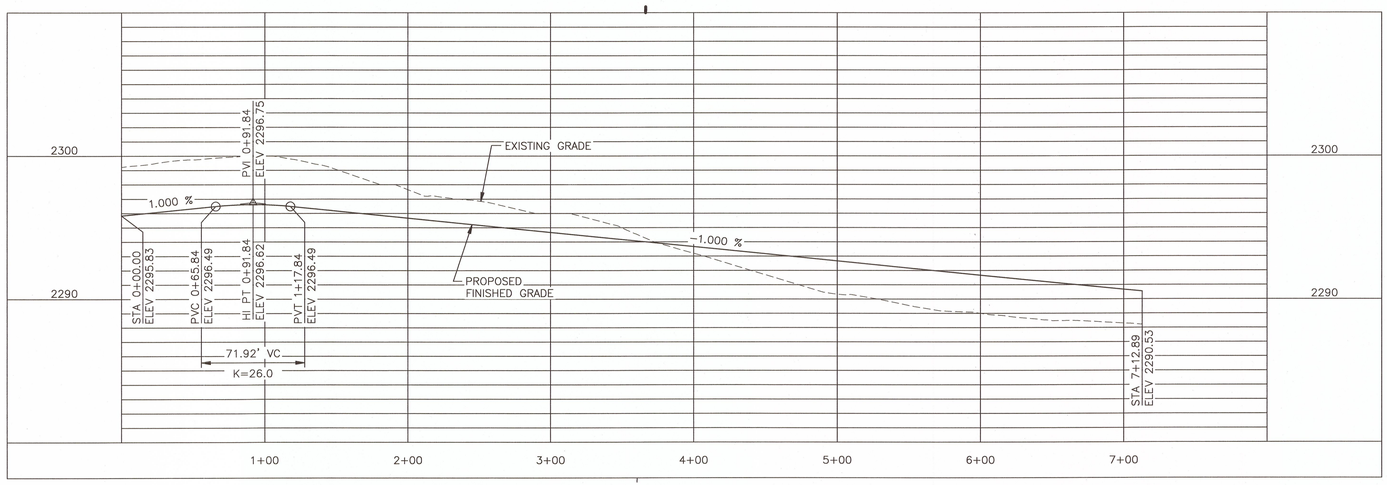

PROFILE – WTG 28 ACCESS RD – STA 0+00 TO STA 7+12.89

HORIZ SCALE: 1"=50'
VERT SCALE: 1"=5'

5' 0 5' 10'
1"=5'

50' 25' 0 50' 100'
1"=50'

REGISTERED PROFESSIONAL ENGINEER
RONALD E. GULLICKS
2890
DATE 1/10/12
REV.3
NORTH DAKOTA

NOTES

1. SEE DRAWING S3000 FOR GENERAL NOTES, LEGEND AND ABBREVIATIONS.
2. ALL CONTOURS REPRESENT FINISHED GRADE UNLESS NOTED OTHERWISE.
3. SEE DRAWING S3911 FOR TYPICAL WTG LAYDOWN/ASSEMBLY AREA DETAILS.
4. SEE DRAWING S3912 FOR TYPICAL ROAD HORIZONTAL AND VERTICAL CURVE DETAILS.

NO.	DATE	REVISION DESCRIPTION	BY	APPROVED
2	14/MAR/11	REVISED PER ECN N-S-0005	SMC	JMS
1	12/FEB/10	APPROVED FOR CONSTRUCTION	RDN	JMS
3	12-1-11	CONSTRUCTION REVISIONS, W.O.#17480	NJG	

THIS DOCUMENT WAS ORIGINALLY ISSUED AND SEALED BY JULIE M STANEK, REGISTRATION NUMBER PE-6480 ON FEBRUARY 12, 2010 AND THE ORIGINAL DOCUMENTS ARE STORED WITH MINNESOTA POWER, AT 30 WEST SUPERIOR STREET, DULUTH, MN 55802.

BLACK & VEATCH CORPORATION

ENGINEER	RDN	DRAWN	PJK
CHECKED	JMS	DATE	07/JAN/10

B&V PROJECT DRAWING NUMBER

I HEREBY CERTIFY THAT THIS DOCUMENT WAS PREPARED BY ME OR UNDER MY DIRECT SUPERVISION AND THAT I AM A DULY REGISTERED PROFESSIONAL ENGINEER UNDER THE LAWS OF THE STATE OF NORTH DAKOTA

SIGNED JULIE M STANEK
DATE 14/MAR/11 REG NO. PE-6480

minnesota power

BISON WIND GENERATING FACILITY NEW SALEM, ND

ROAD PLAN AND PROFILE WTG-28 ACCESS RD STA 0+00 TO 7+12.89

SHEET 1 REV. 3

165233-1STA-S3480

CADD DRAWING – FOR REPRODUCTION ONLY

SCALE:

MICROFILMED / /

CODE

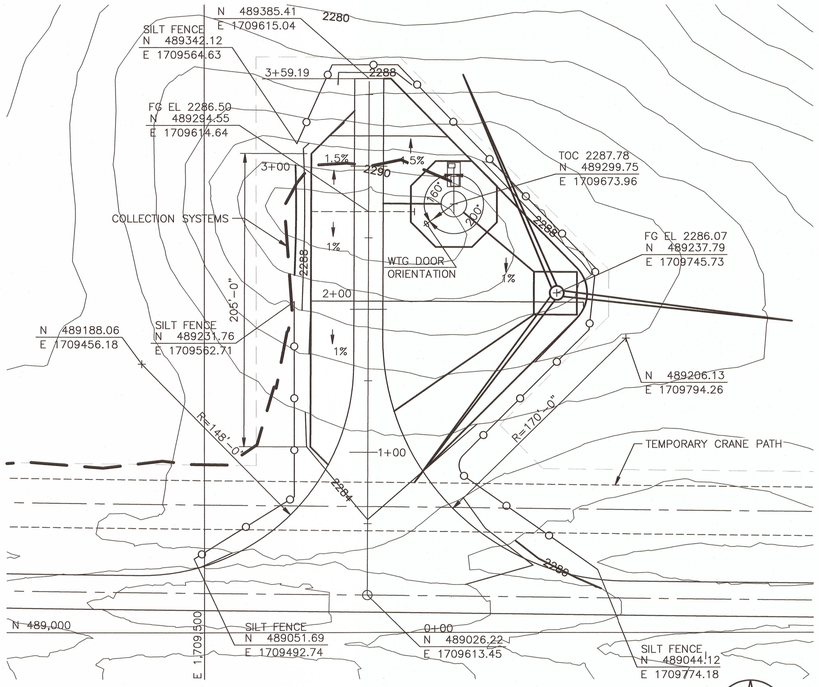

ROAD PLAN – WTG–20 ACCESS RD – STA 0+00 TO STA 3+59.19

SCALE: 1"=50'

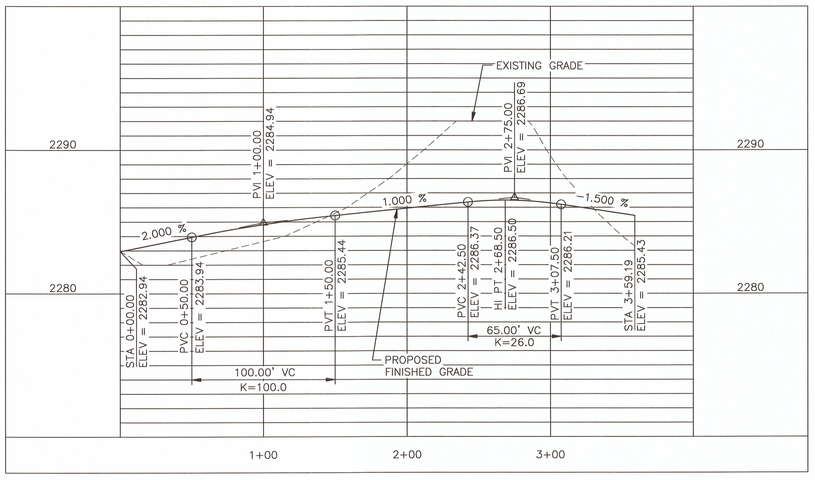

PROFILE – WTG–20 ACCESS RD – STA 0+00 TO STA 3+59.19

HORIZ SCALE: 1"=50'

VERT SCALE: 1"=5'

NOTES

1. SEE DRAWING S3000 FOR GENERAL NOTES, LEGEND AND ABBREVIATIONS.
2. ALL CONTOURS REPRESENT FINISHED GRADE UNLESS NOTED OTHERWISE.
3. SEE DRAWING S3911 FOR TYPICAL WTG LAYDOWN/ASSEMBLY AREA DETAILS.
4. SEE DRAWING S3912 FOR TYPICAL ROAD HORIZONTAL AND VERTICAL CURVE DETAILS.

5' 0 5' 10'
1"=5'

50' 25' 0 50' 100'
1"=50'

NO.	DATE	REVISION DESCRIPTION	BY	APPROVED
2	14/MAR/11	REVISED PER ECN N–S–0005	SMC	JMS
1	12/FEB/10	APPROVED FOR CONSTRUCTION	RDN	JMS
3	12–1–11	CONSTRUCTION REVISIONS, W.O.#17480	NJG	RGU

THIS DOCUMENT WAS ORIGINALLY ISSUED AND SEALED BY JULIE M STANEK, REGISTRATION NUMBER PE–6480 ON FEBRUARY 12, 2010 AND THE ORIGINAL DOCUMENTS ARE STORED WITH MINNESOTA POWER, AT 30 WEST SUPERIOR STREET, DULUTH, MN 55802.

BLACK & VEATCH CORPORATION

ENGINEER	RDN	DRAWN	PJK
CHECKED	JMS	DATE	07/JAN/10
B&V PROJECT	DRAWING NUMBER		

I HEREBY CERTIFY THAT THIS DOCUMENT WAS PREPARED BY ME OR UNDER MY DIRECT SUPERVISION AND THAT I AM A DULY REGISTERED PROFESSIONAL ENGINEER UNDER THE LAWS OF THE STATE OF NORTH DAKOTA.

SIGNED JULIE M STANEK

DATE 14/MAR/11 REG NO. PE–6480

minnesota power

BISON WIND
GENERATING FACILITY
NEW SALEM, ND

ROAD PLAN AND PROFILE
WTG–20 ACCESS ROAD

SHEET 1 REV. 3

165233–1STA–S3481

REGISTERED PROFESSIONAL ENGINEER
RONALD E. GULLICKS
2890
DATE 1/10/2012
REV.3
NORTH DAKOTA

CADD DRAWING – FOR REPRODUCTION ONLY

SCALE:

MICROFILMED / /

CODE

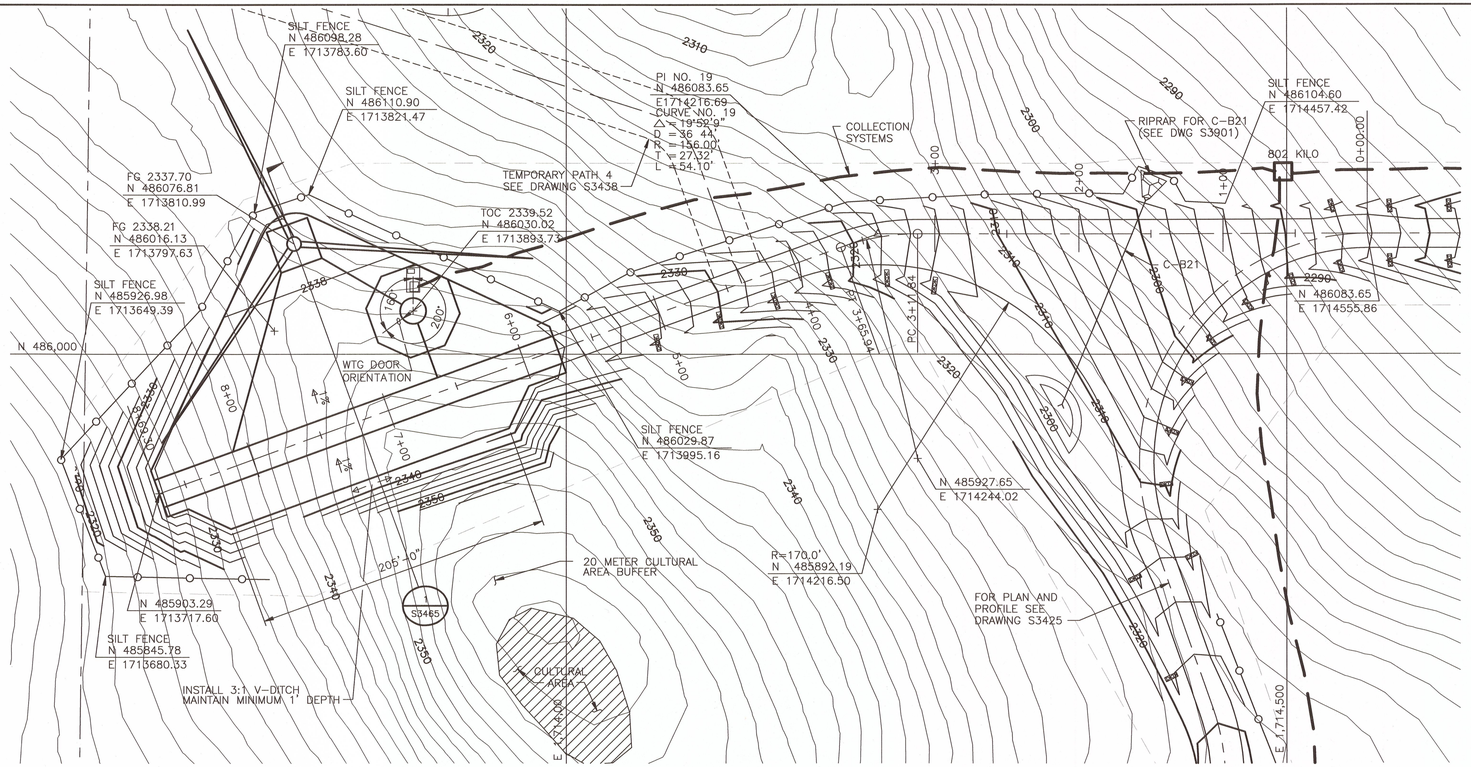

ROAD PLAN – WTG–2 ACCESS RD – STA 0+00 TO STA 8+69.30

SCALE: 1"=50'

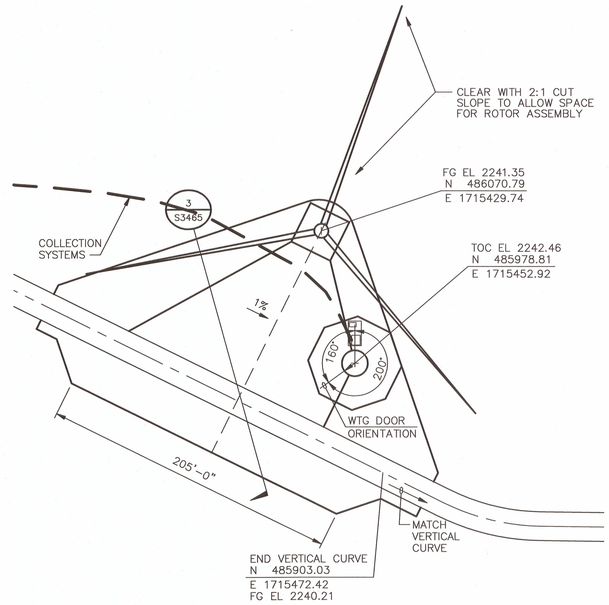

LAYDOWN AREA FOR WTG–30

SCALE: 1"=50'

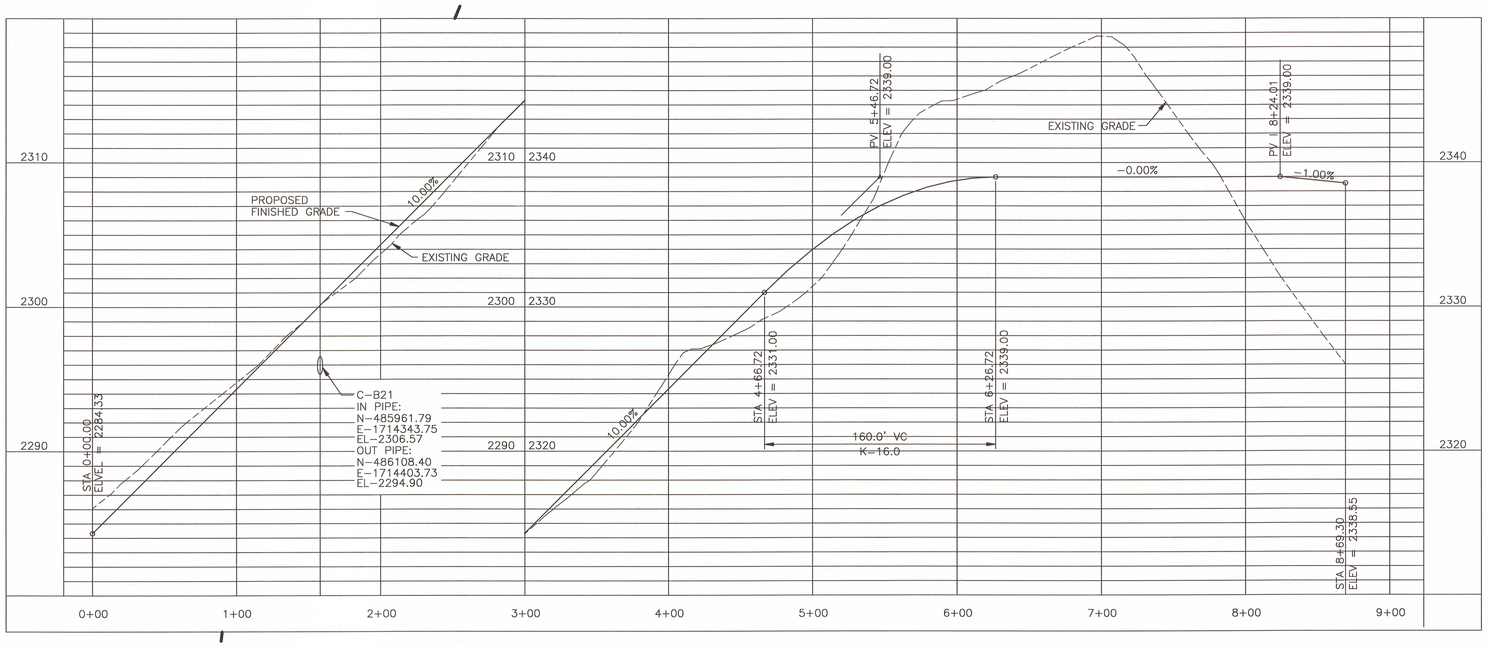

PROFILE – WTG–2 ACCESS RD – STA 0+00 TO STA 8+69.30

HORIZ SCALE: 1"=50'
VERT SCALE: 1"=5'

5' 0 5' 10'
1"=5'

50' 25' 0 50' 100'
1"=50'

NOTES

1. SEE DRAWING S3000 FOR GENERAL NOTES, LEGEND AND ABBREVIATIONS.
2. ALL CONTOURS REPRESENT FINISHED GRADE UNLESS NOTED OTHERWISE.
3. SEE DRAWING S3911 FOR TYPICAL WTG LAYDOWN/ASSEMBLY AREA DETAILS.
4. SEE DRAWING S3912 FOR TYPICAL ROAD HORIZONTAL AND VERTICAL CURVE DETAILS.

REGISTERED PROFESSIONAL ENGINEER
RONALD E. GULLICKS
2890
DATE 1/10/2012
REV.5
NORTH DAKOTA

NO.	DATE	REVISION DESCRIPTION	BY	APPROVED
5	12-1-11	CONSTRUCTION REVISIONS, W.O.#17480	NJG	
3	14/MAR/11	REVISED PER ECN N-S-0005	SMC	JMS
4	21/MAR/11	REVISED PER ECN N-S-0006	SMC	JMS

THIS DOCUMENT WAS ORIGINALLY ISSUED AND SEALED BY JULIE M STANEK, REGISTRATION NUMBER PE-6480 ON FEBRUARY 12, 2010 AND THE ORIGINAL DOCUMENTS ARE STORED WITH MINNESOTA POWER, AT 30 WEST SUPERIOR STREET, DULUTH, MN 55802.

BLACK & VEATCH CORPORATION

ENGINEER	RDN	DRAWN	PJK
CHECKED	JMS	DATE	07/JAN/10
B&V PROJECT DRAWING NUMBER			

I HEREBY CERTIFY THAT THIS DOCUMENT WAS PREPARED BY ME OR UNDER MY DIRECT SUPERVISION AND THAT I AM A DULY REGISTERED PROFESSIONAL ENGINEER UNDER THE LAWS OF THE STATE OF NORTH DAKOTA.
SIGNED JULIE M STANEK
DATE 12/FEB/2010 REG. NO. PE-6480

minnesota power

BISON WIND GENERATING FACILITY NEW SALEM, ND

ROAD PLAN AND PROFILE WTG–2 ACCESS RD AND WTG–30 LAYDOWN AREA

SHEET 1 | REV. 5

165233–1STA–S3482

CADD DRAWING – FOR REPRODUCTION ONLY

SCALE:

MICROFILMED / /

CODE:

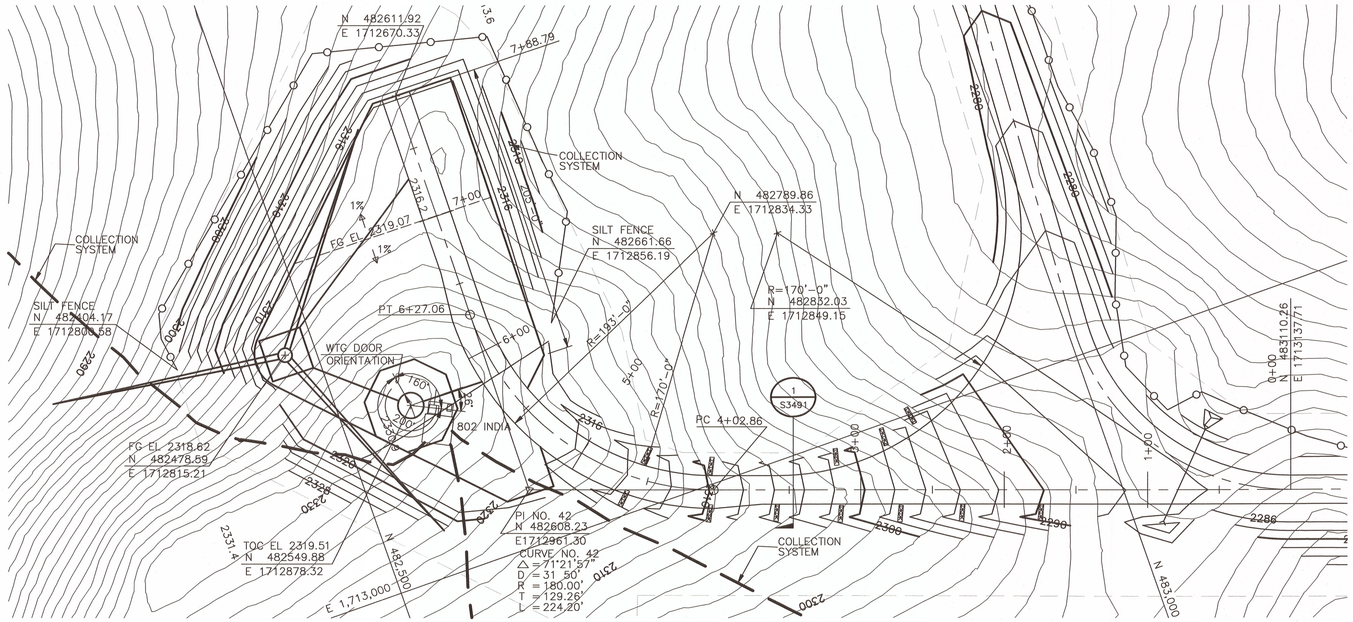

ROAD PLAN – WTG–1 ACCESS RD – STA 0+00 TO STA 7+88.79
SCALE: 1"=50'

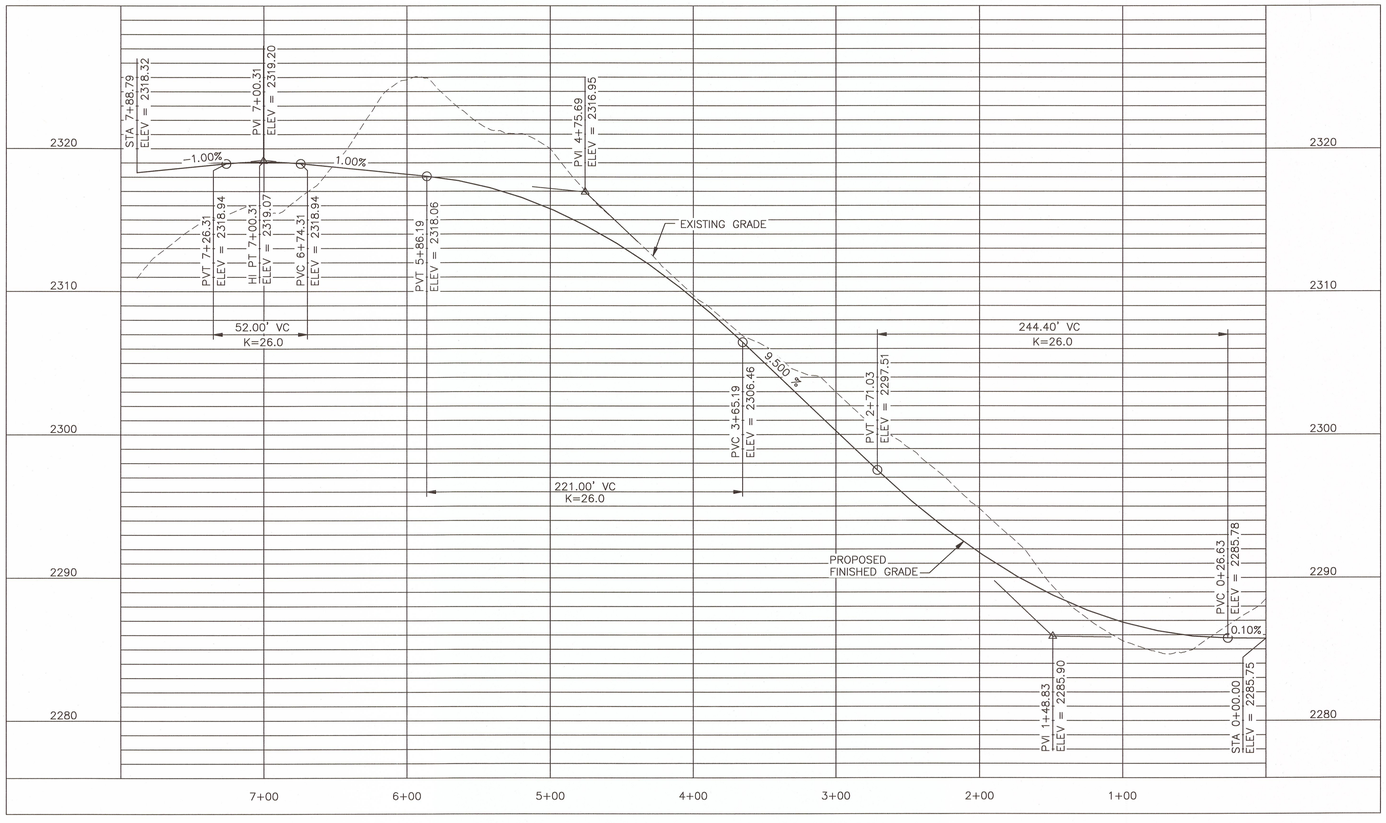

PROFILE – WTG–1 ACCESS RD – STA 0+00 TO STA 7+88.79
HORIZ SCALE: 1"=50'
VERT SCALE: 1"=5'

5' 0 5' 10'
1"=5'

50' 25' 0 50' 100'
1"=50'

REGISTERED PROFESSIONAL ENGINEER
RONALD E. GULLICKS
2890
DATE 1/10/2012
REV.3
NORTH DAKOTA

NOTES

1. SEE DRAWING S3000 FOR GENERAL NOTES, LEGEND AND ABBREVIATIONS.
2. ALL CONTOURS REPRESENT FINISHED GRADE UNLESS NOTED OTHERWISE.
3. SEE DRAWING S3911 FOR TYPICAL WTG LAYDOWN/ASSEMBLY AREA DETAILS.
4. SEE DRAWING S3912 FOR TYPICAL ROAD HORIZONTAL AND VERTICAL CURVE DETAILS.

NO.	DATE	REVISION DESCRIPTION	BY	APPROVED
2	14/MAR/11	REVISED PER ECN N–S–0005	SMC	JMS
1	12/FEB/10	APPROVED FOR CONSTRUCTION	RDN	JMS
3	12–1–11	CONSTRUCTION REVISIONS, W.O.#17480	NJG	

THIS DOCUMENT WAS ORIGINALLY ISSUED AND SEALED BY JULIE M STANEK, REGISTRATION NUMBER PE–6480 ON FEBRUARY 12, 2010 AND THE ORIGINAL DOCUMENTS ARE STORED WITH MINNESOTA POWER, AT 30 WEST SUPERIOR STREET, DULUTH, MN 55802.

BLACK & VEATCH CORPORATION

ENGINEER	DRAWN
RDN	PJK
CHECKED	DATE
JMS	07/JAN/10

BAY PROJECT DRAWING NUMBER

I HEREBY CERTIFY THAT THIS DOCUMENT WAS PREPARED BY ME OR UNDER MY DIRECT SUPERVISION AND THAT I AM A DULY REGISTERED PROFESSIONAL ENGINEER UNDER THE LAWS OF THE STATE OF NORTH DAKOTA

SIGNED JULIE M STANEK

DATE 14/MAR/11 REG NO. PE–6480

minnesota power

BISON WIND GENERATING FACILITY NEW SALEM, ND

ROAD PLAN AND PROFILE
WTG–1 ACCESS RD
STA 0+00 TO 7+88.79

SHEET 1 REV. 3

165233–1STA–S3483

CADD DRAWING – FOR REPRODUCTION ONLY

SCALE:

MICROFILMED / /

CODE

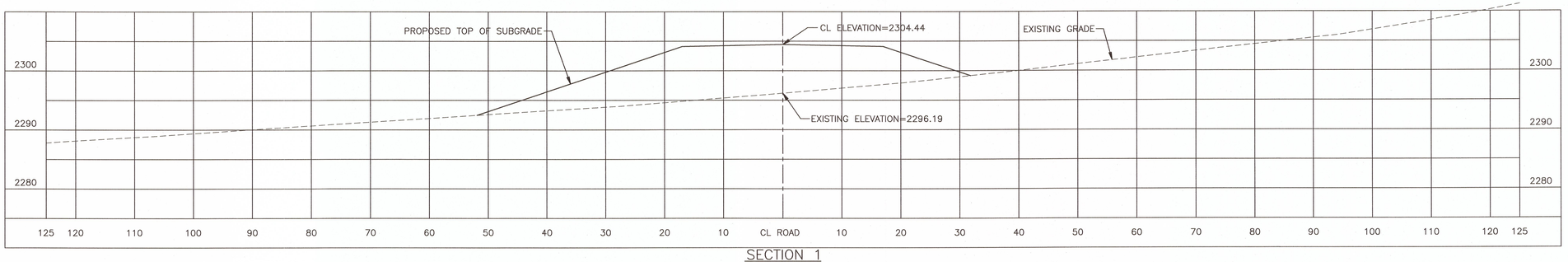

SECTION 1
WTG-30, 10 & 27 ACCESS RD STA 47+35
SCALE: 1"=10'
SEE DWG S3426

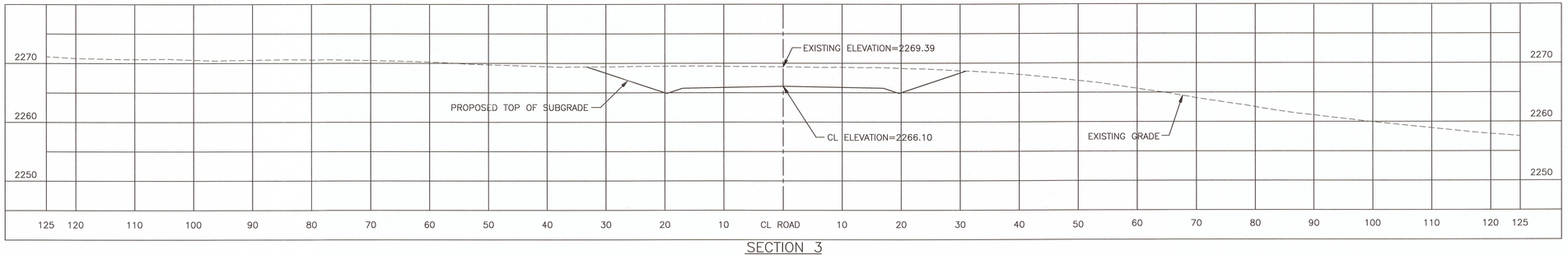

SECTION 3
WTG-30, 10 & 27 ACCESS RD STA 76+35
SCALE: 1"=10'
SEE DWG S3427

10' 0 10' 20'
SCALE: 1"=10'

REGISTERED PROFESSIONAL ENGINEER
RONALD E. GULLICKS
2890
DATE 3/4/11
REV.4
NORTH DAKOTA

NOTES

1. SEE DRAWING S3000 FOR GENERAL NOTES, LEGEND AND ABBREVIATIONS.

NO.	DATE	REVISION DESCRIPTION	BY	APPROVED
2	27/MAY/10	REVISED PER ECN N-S-0003	RDN	JMS
4	9-16-11	CONSTRUCTION REVISIONS, W.O.#17480 NO CHANGES	NJG	
3	14/MAR/11	REVISED PER ECN N-S-0005	SMC	JMS

THIS DOCUMENT WAS ORIGINALLY ISSUED AND SEALED BY JULIE M STANEK, REGISTRATION NUMBER PE-6480 ON FEBRUARY 12, 2010 AND THE ORIGINAL DOCUMENTS ARE STORED WITH MINNESOTA POWER, AT 30 WEST SUPERIOR STREET, DULUTH, MN 55802.

BLACK & VEATCH CORPORATION
ENGINEER RDN | DRAWN PJK
CHECKED JMS | DATE 12/FEB/10
B&V PROJECT DRAWING NUMBER

I HEREBY CERTIFY THAT THIS DOCUMENT WAS PREPARED BY ME OR UNDER MY DIRECT SUPERVISION AND THAT I AM A DULY REGISTERED PROFESSIONAL ENGINEER UNDER THE LAWS OF THE STATE OF NORTH DAKOTA.
SIGNED JULIE M STANEK
DATE 14/MAR/11 REG. NO. PE-6480

minnesota power

BISON WIND
GENERATING FACILITY
NEW SALEM, ND

CROSS SECTIONS-PHASE 1B
MISCELLANEOUS CROSS SECTIONS

SHEET 1 | REV. 4
165233-1STA-S3488

CADD DRAWING - FOR REPRODUCTION ONLY

SCALE: 1"=10' | MICROFILMED / / | CODE

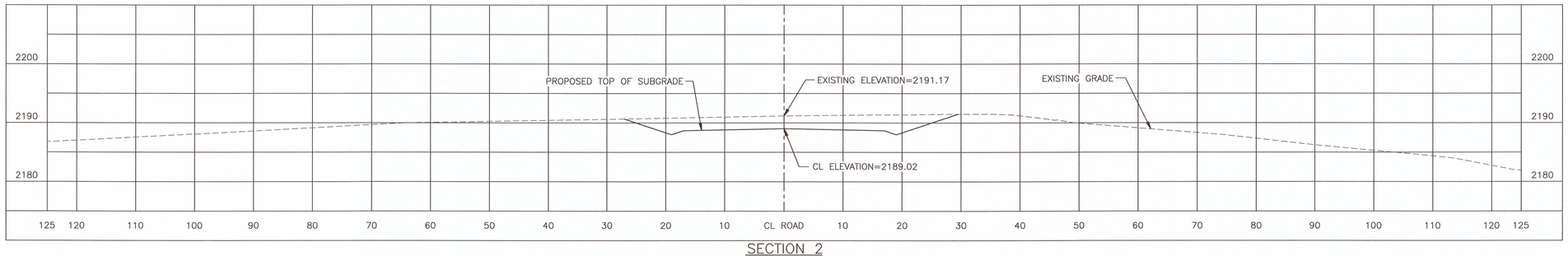

SECTION 2
WTG-11 ACCESS RD STA 16+00
SCALE: 1"=10'
SEE DWG S3430

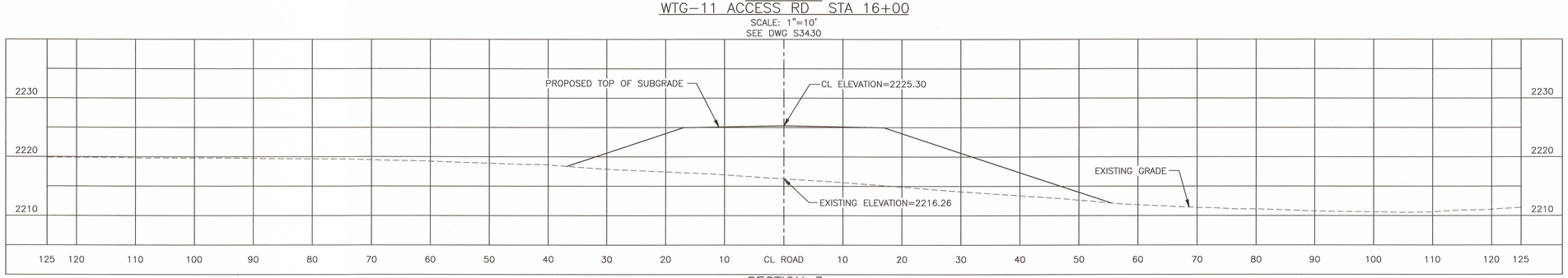

SECTION 3
48TH AVE & WTG-9 ACCESS RD STA 50+00
SCALE: 1"=10'
SEE DWG S3429

10' 0 10' 20'
SCALE: 1"=10'

NOTES

1. SEE DRAWING S3000 FOR GENERAL NOTES, LEGEND AND ABBREVIATIONS.

NO.	DATE	REVISION DESCRIPTION	BY	APPROVED
2	4/MAR/11	REVISED PER ECN N-S-0005	TAR	JMS
1	12/FEB/10	APPROVED FOR CONSTRUCTION	RDN	JMS
3	9-16-11	CONSTRUCTION REVISIONS, W.O.#17480 NO CHANGES	NJG	

THIS DOCUMENT WAS ORIGINALLY ISSUED AND SEALED BY JULIE M STANEK, REGISTRATION NUMBER PE-6480 ON FEBRUARY 12, 2010 AND THE ORIGINAL DOCUMENTS ARE STORED WITH MINNESOTA POWER, AT 30 WEST SUPERIOR STREET, DULUTH, MN 55802.

BLACK & VEATCH CORPORATION

ENGINEER	RDN	DRAWN	PJK
CHECKED	JMS	DATE	29/DEC/09
B&V PROJECT DRAWING NUMBER			

I HEREBY CERTIFY THAT THIS DOCUMENT WAS PREPARED BY ME OR UNDER MY DIRECT SUPERVISION AND THAT I AM A DULY REGISTERED PROFESSIONAL ENGINEER UNDER THE LAWS OF THE STATE OF NORTH DAKOTA.
SIGNED ORIGINAL SIGNED JULIE V. STANEK
DATE 14/MAR/11 REG NO. PE-6480

minnesota power

BISON WIND
GENERATING FACILITY
NEW SALEM, ND

REGISTERED PROFESSIONAL ENGINEER
RONALD E. GULLICKS
2890
DATE 12/6/11
REV.3
NORTH DAKOTA

CROSS SECTIONS-PHASE 1B
MISCELLANEOUS CROSS SECTIONS

SHEET 1 | REV. 3
165233-1STA-S3490

CADD DRAWING - FOR REPRODUCTION ONLY

SCALE: 1"=10'

MICROFILMED / /

CODE

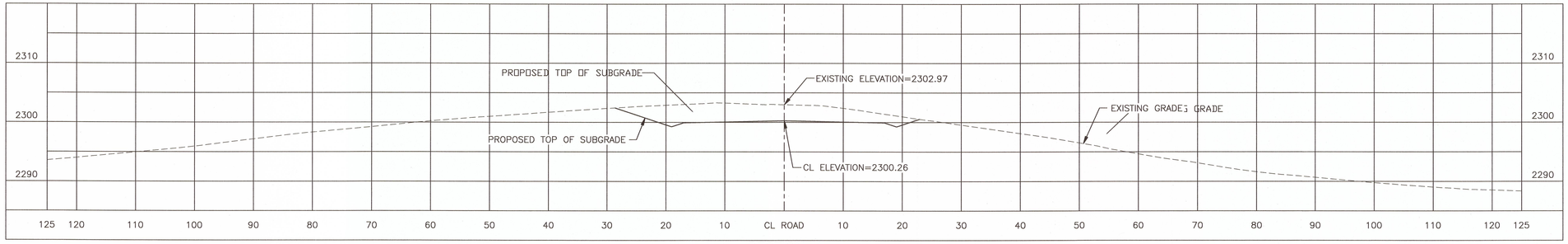

SECTION 1
WTG–1 ACCESS RD STA 3+00
SCALE: 1"=10'
SEE DWG S3483

10' 0 10' 20'
SCALE: 1"=10'

REGISTERED PROFESSIONAL ENGINEER
RONALD E. GULLICKS
2890
DATE 10/1/2011
REV.2
NORTH DAKOTA

NOTES

1. SEE DRAWING S3000 FOR GENERAL NOTES, LEGEND AND ABBREVIATIONS.

NO.	DATE	REVISION DESCRIPTION	BY	APPROVED
2	9–16–11	CONSTRUCTION REVISIONS, W.O.#17480 NO CHANGES	NJG	RDN
1	12/FEB/10	APPROVED FOR CONSTRUCTION	RDN	JMS
0	29/JAN/10	ISSUED FOR BID	RDN	JMS

THIS DOCUMENT WAS ORIGINALLY ISSUED AND SEALED BY JULIE M STANEK, REGISTRATION NUMBER PE–6480 ON FEBRUARY 12, 2010 AND THE ORIGINAL DOCUMENTS ARE STORED WITH MINNESOTA POWER, AT 30 WEST SUPERIOR STREET, DULUTH, MN 55802.

BLACK & VEATCH CORPORATION

ENGINEER	RDN	DRAWN	PJK
CHECKED	JMS	DATE	29/DEC/09
B&V PROJECT DRAWING NUMBER			

I HEREBY CERTIFY THAT THIS DOCUMENT WAS PREPARED BY ME OR UNDER MY DIRECT SUPERVISION AND THAT I AM A DULY REGISTERED PROFESSIONAL ENGINEER UNDER THE LAWS OF THE STATE OF NORTH DAKOTA
SIGNED JULIE M STANEK
DATE 14/MAR/11 SIGNED NO. PE–6480
ORIGINAL SIGNATURES ON FILE

minnesota power

BISON WIND
GENERATING FACILITY
NEW SALEM, ND

CROSS SECTIONS–PHASE 1B
MISCELLANEOUS CROSS SECTIONS

SHEET 1 REV. 2
165233–1STA–S3491

CADD DRAWING – FOR REPRODUCTION ONLY
SCALE: 1"=10'
MICROFILMED / /
CODE

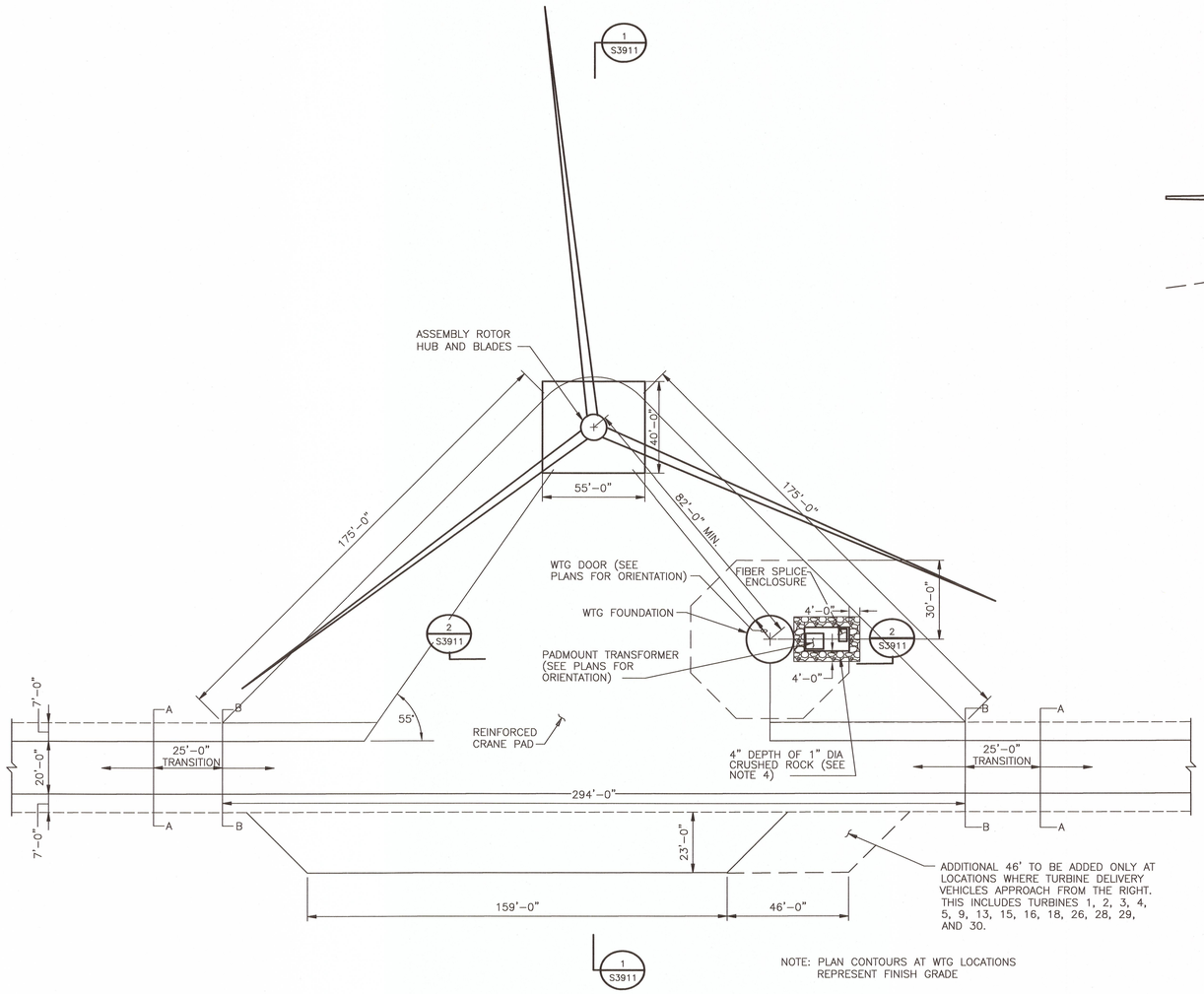

NOTE: PLAN CONTOURS AT WTG LOCATIONS REPRESENT FINISH GRADE

TYPICAL WTG ASSEMBLY LAYOUT
NO SCALE

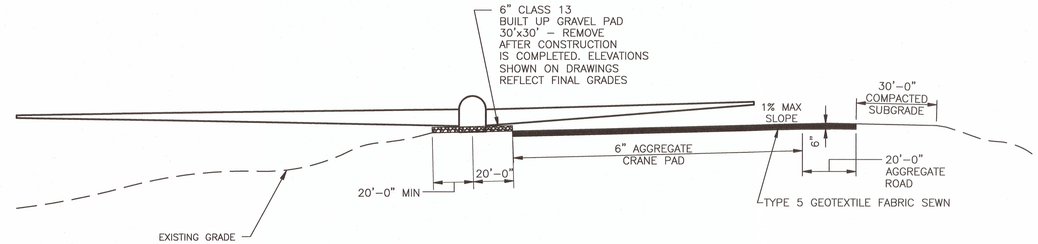

SECTION 1
NO SCALE

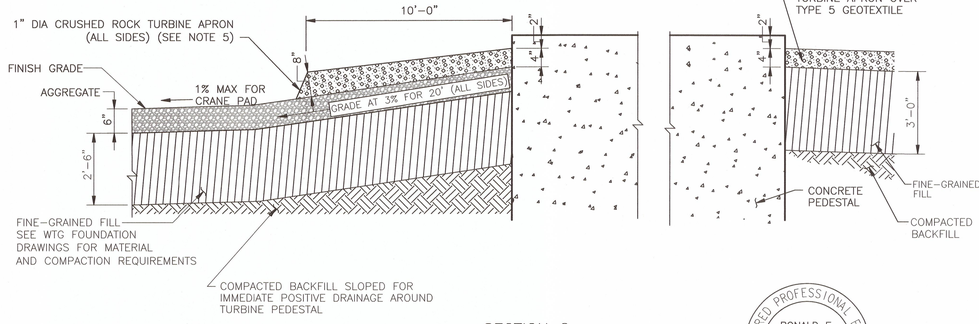

SECTION 2
NO SCALE

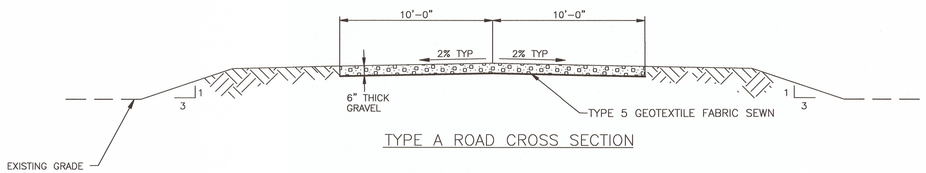

TYPE A ROAD CROSS SECTION

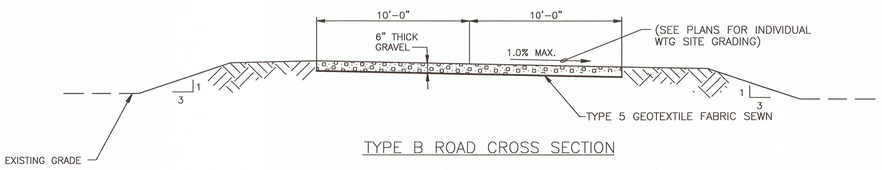

TYPE B ROAD CROSS SECTION

NOTES

1. SEE DRAWING S3000 FOR GENERAL NOTES, LEGEND AND ABBREVIATIONS.
2. SEE DRAWING S5006 FOR FOUNDATION DETAILS.
3. SEE DRAWING E2300 FOR ELECTRICAL DETAILS.
4. CONTRACTOR SHALL FURNISH AND PLACE 4" OF COMPACTED CRUSHED ROCK AFTER COMPLETING FINAL LIFT OF COMPACTED BASE MATERIAL. CRUSHED ROCK SHALL CONFORM TO GRADATION NO. 4 PER ND DOT STANDARD SPECIFICATION, SECTION 816.02 (COURSE AGGREGATE).
5. CONTRACTOR SHALL FURNISH AND PLACE COMPACTED CRUSHED ROCK TURBINE APRON (ALL SIDES) AFTER COMPLETING FINAL LIFT OF COMPACTED BASE MATERIAL. CRUSHED ROCK SHALL CONFORM TO GRADATION NO 4. PER ND DOT STANDARD SPECIFICATION, SECTION 816.02 (COURSE AGGREGATE)

REGISTERED PROFESSIONAL ENGINEER
RONALD E. GULLICKS
2890
DATE 14/MAR/11
REV.3
NORTH DAKOTA

NO.	DATE	REVISION DESCRIPTION	BY	APPROVED
2	14/MAR/11	REVISED PER ECN N-S-0005	SMC	JMS
1	12/FEB/10	APPROVED FOR CONSTRUCTION	RDN	JMS
3	9-16-11	CONSTRUCTION REVISIONS, W.O.#17480	NJG	REV

THIS DOCUMENT WAS ORIGINALLY ISSUED AND SEALED BY JULIE M STANEK, REGISTRATION NUMBER PE-6480 ON FEBRUARY 12, 2010 AND THE ORIGINAL DOCUMENTS ARE STORED WITH MINNESOTA POWER, AT 30 WEST SUPERIOR STREET, DULUTH, MN 55802.

BLACK & VEATCH CORPORATION

ENGINEER	RDN	DRAWN	PJK
CHECKED	JMS	DATE	07/JAN/10

B&V PROJECT DRAWING NUMBER

I HEREBY CERTIFY THAT THIS DOCUMENT WAS PREPARED BY ME OR UNDER MY DIRECT SUPERVISION AND THAT I AM A DULY REGISTERED PROFESSIONAL ENGINEER UNDER THE LAWS OF THE STATE OF NORTH DAKOTA

SIGNED JULIE M STANEK
DATE 14/MAR/11 REG NO. PE-6480

minnesota power

BISON WIND GENERATING FACILITY NEW SALEM, ND

ROADS AND PARKING-SITE DETAILS AND SECTIONS

SHEET 1 REV. 3

165233-1STA-S3911

CADD DRAWING – FOR REPRODUCTION ONLY

SCALE:

MICROFILMED / / CODE

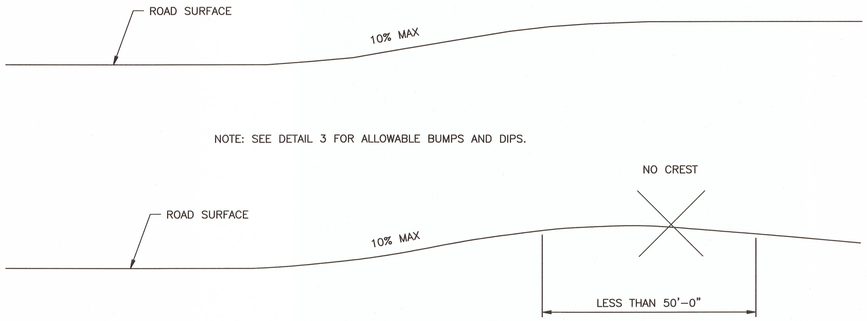

DETAIL 1
ALLOWABLE VEHICLE GRADES
NOT TO SCALE

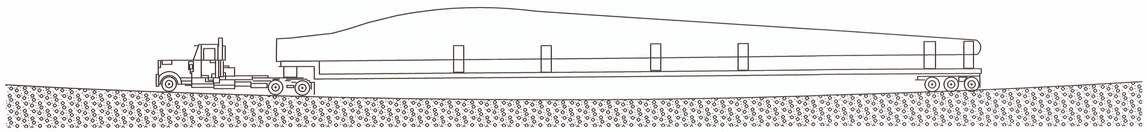

MINIMUM RADIUS OF 1640 FT ON ALL TRAVELED SURFACES

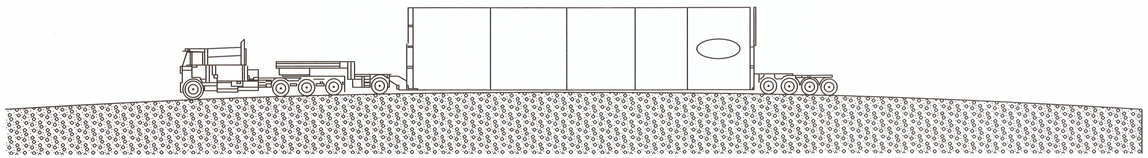

MINIMUM RADIUS OF 1640 FT ON ALL TRAVELED SURFACES

DETAIL 2
TYPICAL VERTICAL RADIUS
NOT TO SCALE

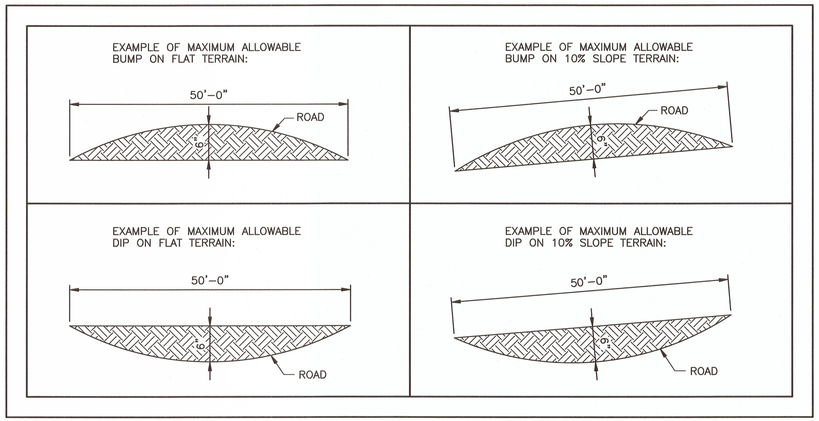

DETAIL 3
ALLOWABLE BUMPS AND DIPS
NOT TO SCALE

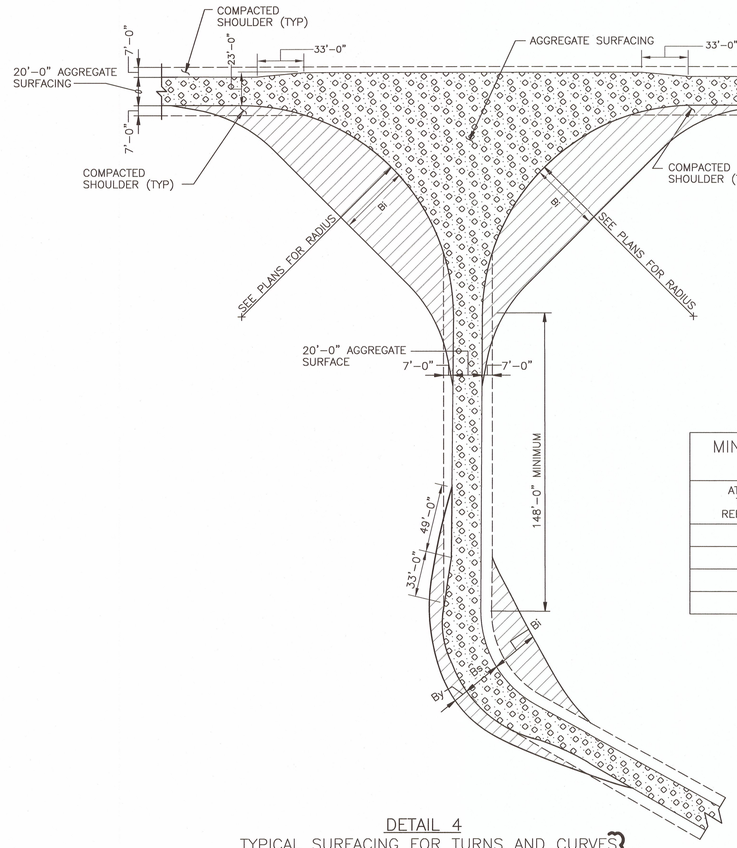

DETAIL 4
TYPICAL SURFACING FOR TURNS AND CURVES
CURVE SEPARATION DISTANCE
NO SCALE

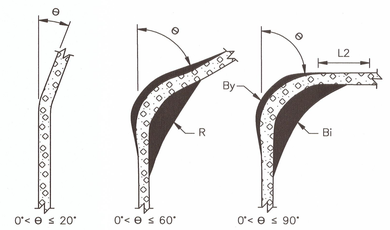

DETAIL 5
TURNS PLAN VIEW
NO SCALE

MINIMUM REQUIREMENTS FOR CURVES AND INTERSECTIONS WITHIN COMPONENT DELIVERY ROADS

AT TURNS THE RUNNING WIDTH OF ROAD (Bs)= 34 FEET. L2=49 FEET CURVE INSIDE TURNING RADIUS R=148' By, Bi (SEE DIAGRAM AND CHART BELOW) HATCHED AREAS REPRESENT AREAS THAT MUST BE CLEARED OF ANY OBSTRUCTIONS TO ALLOW OVERHANG

MAXIMUM CURVATURE	0°< Θ ≤ 20°	20°< Θ ≤ 60°	60°< Θ ≤ 90°
By	0 FT	10 FT	13 FT
Bi	0 FT	36 FT	49 FT
Bs	20 FT	23 FT	23 FT

NOTES

1. SEE DRAWING S3000 FOR GENERAL NOTES, LEGEND AND ABBREVIATIONS.

REGISTERED PROFESSIONAL ENGINEER
RONALD E. GULLICKS
2890
DATE 12/6/10
REV.2
NORTH DAKOTA

NO.	DATE	REVISION DESCRIPTION	BY	APPROVED
2	9–16–11	CONSTRUCTION REVISIONS, W.O.#17480 NO CHANGES	NJG	
1	12/FEB/10	APPROVED FOR CONSTRUCTION	RDN	JMS
0	07/JAN/10	ISSUED FOR BID	RDN	JMS

THIS DOCUMENT WAS ORIGINALLY ISSUED AND SEALED BY JULIE M STANEK, REGISTRATION NUMBER PE–6480 ON FEBRUARY 12, 2010 AND THE ORIGINAL DOCUMENTS ARE STORED WITH MINNESOTA POWER, AT 30 WEST SUPERIOR STREET, DULUTH, MN 55802.

BLACK & VEATCH CORPORATION
ENGINEER RDN | DRAWN PJK
CHECKED JMS | DATE 07/JAN/10
B&V PROJECT DRAWING NUMBER

I HEREBY CERTIFY THAT THIS DOCUMENT WAS PREPARED BY ME OR UNDER MY DIRECT SUPERVISION AND THAT I AM A DULY REGISTERED PROFESSIONAL ENGINEER UNDER THE LAWS OF THE STATE OF NORTH DAKOTA
SIGNED JULIE M STANEK
DATE 14/MAY/11 REGISTRATION NUMBER PE–6480

minnesota power

BISON WIND GENERATING FACILITY NEW SALEM, ND

ROADS AND PARKING–SITE DETAILS AND SECTIONS

SHEET 1 | REV. 2
165233–1STA–S3912

CADD DRAWING – FOR REPRODUCTION ONLY

SCALE:

MICROFILMED / /

CODE

RIPRAP TABLE

CULVERT NO.	LENGTH OF APRON (FT) OUTLET "L"	THICKNESS (IN) "T"	BOTTOM WIDTH AT END OF CULVERT (FT) OUTLET "W"	BOTTOM WIDTH AT END OF APRON (FT) (SEE NOTE 3)	REMARKS
C-1-1	31	20	9	40	
C-3-1	44	20	13	57	
C-4-1	46	20	13	58	
C-5-1	15	20	5	20	
C-6-1	44	20	13	57	
C-6-2	17	20	5	22	
C-8-1	45	20	13	58	
C-A1	32	20	16	47	
C-A2	34	20	13	47	
C-A3	20	20	6	26	
C-A4	29	20	8	36	
C-A6	14	20	4	18	
C-A7	13	20	4	17	
C-A8	43	20	24	67	
C-A9	21	20	8	30	
C-A10	21	20	6	27	
C-A11	18	20	5	24	
C-A12	12	20	4	15	
C-A13	12	20	4	16	
C-A14	27	20	11	38	
C-A15	28	20	11	38	
C-A16	30	20	16	45	
C-A17	16	20	5	20	
C-A18	12	20	4	15	
C-A19	13	20	4	16	
C-A20	8	20	3	11	
C-A21	12	20	4	16	
C-A22	11	20	3	14	
C-A23	15	20	4	19	
C-B1	19	20	6	25	
C-B2	16	20	6	22	
C-B3	24	20	10	34	
C-B5	16	20	5	20	
C-B8	38	20	21	60	
C-B9	20	20	8	28	
C-B10	16	20	5	20	
C-B11	20	20	8	29	
C-B14	15	20	4	18	
C-B16	38	20	17	54	
C-B18	18	20	5	22	
C-B19	16	20	5	21	
C-B20	10	20	3	13	
C-B21	16	20	5	20	
C-B22	15	20	5	20	

CULVERT TABLE

CULVERT NO.	CENTERLINE COORDINATES INLET END NORTH	INLET END EAST	OUTLET END NORTH	OUTLET END EAST	LENGTH (FEET)	INLET INV ELEVATION	OUTLET INV ELEVATION	END TYPE	PIPE DIAMETER	NUMBER OF BARRELS	PIPE MATERIAL (INCHES)	REMARKS
C-1-1	481268.24	1700133.25	481228.96	1700100.73	51	2262.78	2262.67	FLARED END SECTION	24	2	CHDPE	
C-3-1	481190.91	1702647.84	481232.90	1702648.42	42	2226.59	2225.30	FLARED END SECTION	36	2	CHDPE	
C-4-1	481146.93	1704924.67	481202.93	1704924.67	56	2192.87	2190.27	FLARED END SECTION	36	2	CHDPE	
C-5-1	481155.88	1705037.56	481210.88	1705037.56	55	2194.65	2190.02	FLARED END SECTION	18	1	CHDPE	
C-6-1	481139.91	1705946.84	481184.90	1705947.46	45	2188.79	2188.06	FLARED END SECTION	36	2	CHDPE	
C-6-2	480824.12	1705291.12	480824.12	1705324.12	33	2195.48	2195.24	FLARED END SECTION	18	1	CHDPE	
C-8-1	480980.32	1708681.66	480980.32	1708714.66	33	2166.00	2165.90	FLARED END SECTION	36	2	CHDPE	
A1	478623.98	1704963.02	478606.78	1705019.57	59	2186.70	2186.01	FLARED END SECTION	36	3	CHDPE	
A2	478461.69	1704958.54	478475.92	1705024.12	67	2188.13	2186.50	FLARED END SECTION	36	2	CHDPE	
A3	474019.42	1704945.05	474007.26	1704999.65	56	2236.82	2234.85	FLARED END SECTION	24	1	CHDPE	
A4	472959.83	1704936.75	472938.31	1705000.21	67	2221.51	2220.38	FLARED END SECTION	30	1	CHDPE	
A6	471507.43	1704140.92	471433.60	1704175.44	82	2300.72	2297.80	FLARED END SECTION	15	1	CHDPE	
A7	471567.83	1704755.98	471451.19	1704780.14	120	2283.22	2271.33	FLARED END SECTION	15	1	CHDPE	
A8	469748.66	1710214.00	469748.63	1710256.56	43	2158.00	2156.00	FLARED END SECTION	48	4	CHDPE	
A9	475338.32	1704995.77	475338.50	1704950.68	45	2246.40	2246.17	FLARED END SECTION	24	2	CHDPE	
A10	474710.72	1706782.49	474656.18	1706784.96	55	2217.79	2217.04	FLARED END SECTION	24	1	CHDPE	
A11	474690.97	1707607.90	474644.74	1707607.63	46	2213.92	2213.61	FLARED END SECTION	21	1	CHDPE	
A12	474657.67	1709514.47	474612.09	1709514.62	46	2214.50	2213.31	FLARED END SECTION	15	1	CHDPE	
A13	474658.02	1710014.43	474582.38	1710013.36	76	2209.70	2203.67	FLARED END SECTION	15	1	CHDPE	
A14	474208.69	1710185.35	474143.54	1710296.33	129	2177.59	2173.78	FLARED END SECTION	30	2	CHDPE	
A15	471751.14	1710210.22	471727.95	1710267.11	61	2161.56	2160.53	FLARED END SECTION	30	2	CHDPE	
A16	474578.80	1711494.43	474640.52	1711495.10	62	2144.81	2144.07	FLARED END SECTION	36	3	CHDPE	
A17	474567.97	1712843.14	474613.33	1712843.50	45	2155.55	2155.50	FLARED END SECTION	18	1	CHDPE	
A18	474603.85	1713219.93	474564.06	1713219.47	40	2154.20	2154.06	FLARED END SECTION	15	1	CHDPE	
A19	474521.68	1715457.16	474556.25	1715476.89	40	2160.58	2160.39	FLARED END SECTION	15	1	CHDPE	
A20	473848.82	1715621.32	473799.57	1715642.76	54	2158.65	2158.30	FLARED END SECTION	12	1	CHDPE	
A21	480537.59	1705135.51	480564.48	1705135.36	27	2198.60	2198.60	FLARED END SECTION	15	1	CHDPE	
A22	474586.44	1714449.84	474545.68	1714449.26	41	2164.91	2164.57	FLARED END SECTION	12	1	CHDPE	
A23	469400.99	1710253.68	469403.34	1710204.11	50	2157.70	2157.40	FLARED END SECTION	15	1	CHDPE	
B1	488966.64	1708373.78	488979.84	1708438.84	65.70	2278.57	2277.84	FLARED END SECTION	24	1	CHDPE	
B2 (EAST)	487725.94	1708443.33	487656.70	1708380.74	92.20	2275.77	2274.96	FLARED END SECTION	18	2	CHDPE	
B2 (WEST)	487729.60	1708441.08	487660.12	1708378.88	92.20	2274.96	2275.16	FLARED END SECTION	18	2	CHDPE	
B3 (NORTH)	486212.83	1711016.64	486211.81	1711062.76	46.12	2238.92	2238.72	FLARED END SECTION	30	2	CHDPE	
B3 (SOUTH)	486206.72	1711016.94	486205.65	1711062.84	45.90	2238.93	2238.69	FLARED END SECTION	30	2	CHDPE	
B5	489616.87	1711700.93	489668.48	1711709.09	50.80	2277.30	2277.30	FLARED END SECTION	18	1	CHDPE	
B8 (NORTH)	482740.66	1716212.95	482740.88	1716294.33	81.38	2153.56	2152.52	FLARED END SECTION	48	3	CHDPE	
B8 (MIDDLE)	482729.82	1716212.87	482729.12	1716293.94	81.07	2153.48	2152.75	FLARED END SECTION	48	3	CHDPE	
B8 (SOUTH)	482718.77	1716213.04	482718.41	1716293.85	80.81	2153.77	2152.65	FLARED END SECTION	48	3	CHDPE	
B9 (EAST)	485822.92	1716268.15	485805.88	1716326.90	58.75	2200.90	2200.20	FLARED END SECTION	24	2	CHDPE	
B9 (WEST)	485818.34	1716266.77	485801.07	1716325.31	58.54	2200.90	2200.27	FLARED END SECTION	24	2	CHDPE	
B10	485332.28	1716266.90	485328.73	1716315.62	47.7	2202.64	2202.21	FLARED END SECTION	18	1	CHDPE	
B11 (WEST)	483651.11	1716540.65	483598.25	1716538.85	52.86	2165.31	2164.86	FLARED END SECTION	24	2	CHDPE	
B11 (EAST)	483650.74	1716545.55	483598.22	1716543.90	52.52	2165.21	2164.86	FLARED END SECTION	24	2	CHDPE	
B14	483551.64	1718707.50	483595.34	1718736.10	48.30	2170.45	2169.11	FLARED END SECTION	15	1	CHDPE	
B16 (NORTH)	490710.86	1708385.25	490724.33	1708495.43	110.18	2220.65	2219.56	FLARED END ON OUTLET	48	2	CHDPE	
B16 (SOUTH)	490699.83	1708386.64	490713.93	1708496.67	110.03	2220.48	2219.78	FLARED END ON OUTLET	48	2	CHDPE	
B18	489845.17	1708401.33	489941.38	1708468.88	116	2262.03	2259.40	FLARED END SECTION	18	1	CHDPE	
B19	482956.68	1712423.66	483009.10	1712387.88	48.60	2267.86	2264.60	FLARED END SECTION	18	1	CHDPE	
B20	483014.36	1713134.39	483071.69	1713074.02	81.70	2282.68	2280.11	FLARED END SECTION	12	1	CHDPE	
B21	485961.79	1714403.73	486108.40	1714403.73	156.70	2306.57	2294.90	FLARED END SECTION	18	1	CHDPE	
B22	491422.20	1708502.34	491357.42	1708592.08	112.30	2250.80	2242.24	FLARED END SECTION	42	1	CHDPE	

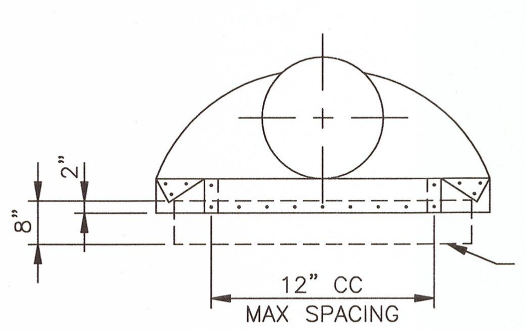

TYPICAL TREATMENT OF FLARED END SECTION
NO SCALE

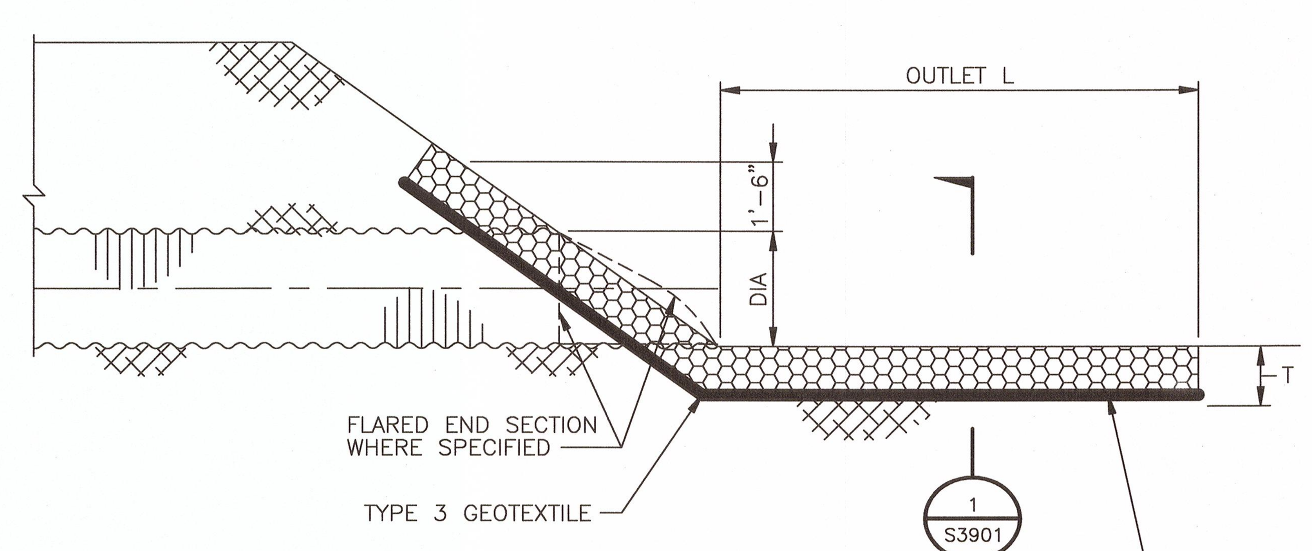

OUTLET END
SEE RIPRAP TABLE

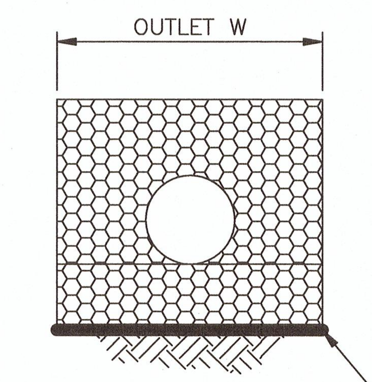

SECTION 1
NO SCALE
THIS DWG
SEE RIPRAP TABLE

TYPICAL CULVERT RIPRAP
NO SCALE

NOTES

1. SEE DWG S3000 FOR GENERAL NOTES, LEGEND, AND ABBREVIATIONS.
2. GRADATION OF RIPRAP SHALL BE ACCORDING TO SECTION 2375.3.5.2 OF THE PROJECT RIPRAP SPECIFICATION.
3. WHERE CULVERT IS DISCHARGING INTO DEFINED CHANNEL, RIPRAP SHALL EXTEND TO TOP OF CHANNEL WALLS.
4. RIPRAP APRON SHALL BE INSTALLED AT 0% SLOPE ALONG DIRECTION OF FLOW.

REGISTERED PROFESSIONAL ENGINEER
RONALD E. GULLICKS
2890
DATE 10/6/2011
REV.6
NORTH DAKOTA

N

NO.	DATE	REVISION DESCRIPTION	BY	APPROVED
5	14/MAR/11	REVISED PER ECN N-S-0005	SMC	JMS
4	29/JUN/10	REVISED PER ECN N-S-0004	RDN	JMS
6	9-16-11	CONSTRUCTION REVISIONS, W.O.#17480	NJG	REL

THIS DOCUMENT WAS ORIGINALLY ISSUED AND SEALED BY DALE S. LINDBERG JR., REGISTRATION NUMBER 1973 ON OCTOBER 5, 2009 AND THE ORIGINAL DOCUMENTS ARE STORED WITH MINNESOTA POWER, AT 30 WEST SUPERIOR STREET, DULUTH, MN 55802.

BLACK & VEATCH CORPORATION
ENGINEER RDN | DRAWN PJK
CHECKED JMS | DATE 05/OCT/09
B&V PROJECT DRAWING NUMBER

I HEREBY CERTIFY THAT THIS DOCUMENT WAS PREPARED BY ME OR UNDER MY DIRECT SUPERVISION AND THAT I AM A DULY REGISTERED PROFESSIONAL ENGINEER UNDER THE LAWS OF THE STATE OF NORTH DAKOTA
SIGNED JULIE M STANEK
DATE 14/MAR/11 REG NO. PE-6480
SIGNATURE ON FILE

minnesota power

BISON WIND
GENERATING FACILITY
NEW SALEM, ND

GRADING AND DRAINAGE-SITE
TYPICAL CULVERT AND RIPRAP DETAILS

SHEET 1 | REV. 6

165233-CSTA-S3901

CADD DRAWING - FOR REPRODUCTION ONLY

SCALE:

MICROFILMED / /

CODE

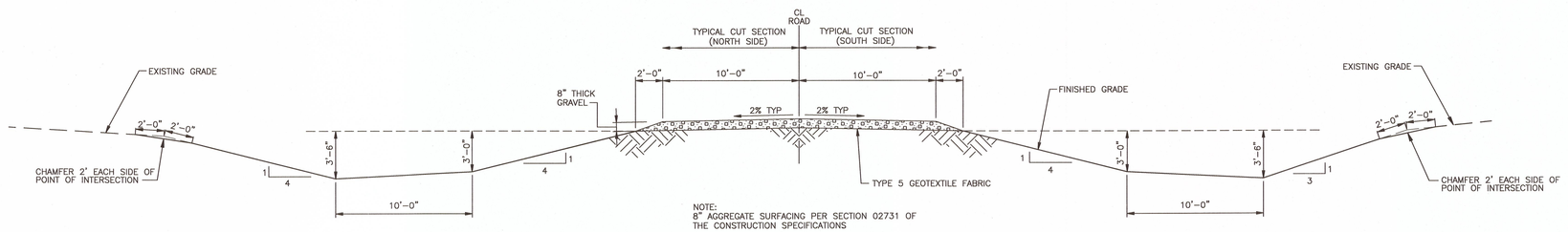

MORTON COUNTY STANDARD GRAVEL ROAD CUT SECTION

NO SCALE

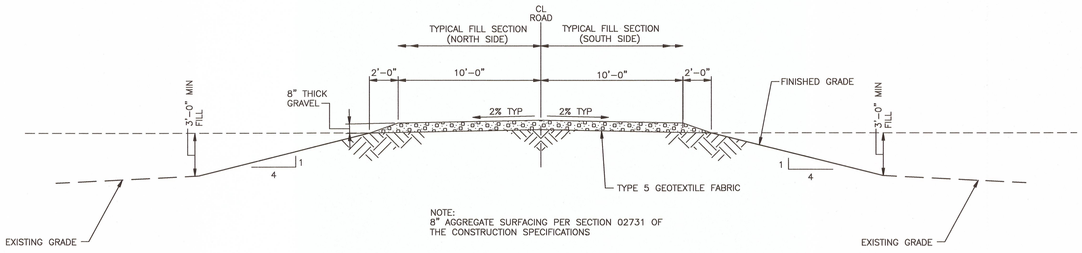

MORTON COUNTY STANDARD GRAVEL ROAD FILL SECTION

NO SCALE

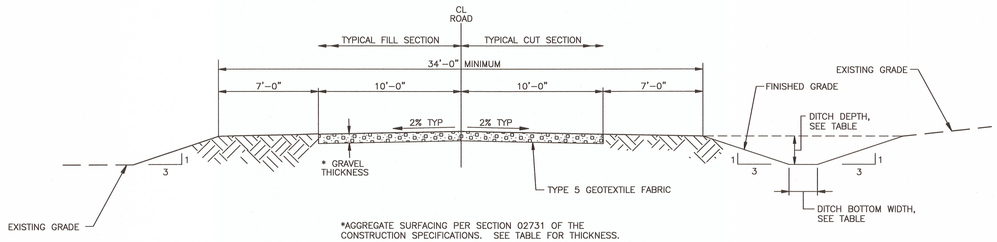

TYPE 1 PROJECT ACCESS ROAD (ACCOMMODATE CRANE TRAVEL)

NO SCALE

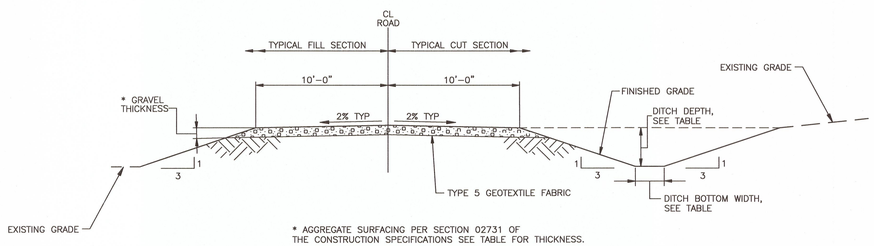

TYPE 2 PROJECT ACCESS ROAD (NO CRANE TRAVEL)

NO SCALE

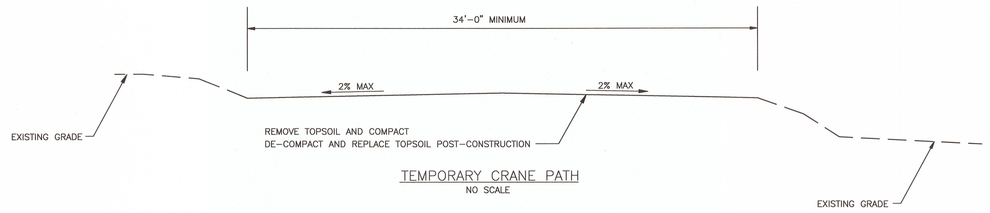

TEMPORARY CRANE PATH

NO SCALE

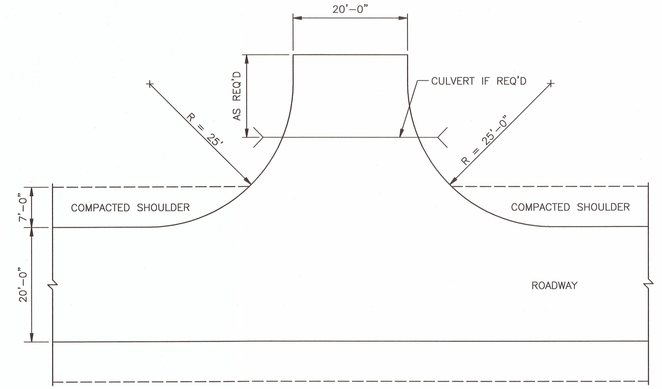

TYPICAL APPROACH DETAIL

NO SCALE

CONSTRUCTION PHASE	ROAD NAME	BEGIN STATION	END STATION	CROSS-SECTION AGGREGATE THICKNESS	CROSS-SECTION ROADWAY WIDTH	CROSS-SECTION SURFACING WIDTH	CROSS-SECTION DITCH BOTTOM	CROSS-SECTION DITCH DEPTH	COMMENTS
FALL 2009	30TH STREET	0+00	52+95	8"	24'	20'	10'	3.5'	MORTON COUNTY CROSS-SECTION
	30TH STREET	52+95	87+09	8"	34'	20'	2'	2'	TYPICAL PROJECT ACCESS ROAD CROSS-SECTION
	O&M NORTH ACCESS	0+00	3+84	6"	20'	20'	2'	1'	
	SUBSTATION ACCESS	87+09	90+37	6"	20'	20'	V-DITCH	1'	
PHASE 1A	WTG-18 ACCESS RD	0+00	12+64	6"	34'	20'	V-DITCH	1'	
	52ND AVE	0+00	64+25	8"	34'	20'	2'	2'	
	52ND AVE & WTG 23 ACCESS RD	64+25	107+88	6"	34'	20'	2'	2'	TRANSITION TO 6" OVER 20'
	O&M WEST ACCESS	0+00	1+76	6"	20'	20'	V-DITCH	2'	
	31ST STREET	0+00	54+27	8"	34'	20'	2'	VARIES	
	31ST STREET & 50TH AVE	54+27	117+51	6"	34'	20'	2'	VARIES	TRANSITION TO 6" OVER 20'
	51ST AVE	0+00	36+00	8"	34'	20'	2'	2'	
	51ST AVE	36+00	52+74	8"	20'	20'	2'	2'	20' WIDE CROSS-SECTION (NO CRANE TRAVEL)
	WTG-5, 14 & 19 ACCESS RD	0+00	65+92	6"	34'	20'	V-DITCH	1'	
	WTG-32 ACCESS RD	0+00	7+77	6"	34'	20'	V-DITCH	1'	
	WTG-3 ACCESS RD	0+00	6+66	6"	34'	20'	V-DITCH	1'	
	WTG-8 ACCESS RD	0+00	7+12	6"	34'	20'	V-DITCH	1'	
	WTG-16 ACCESS RD	0+00	10+16	6"	34'	20'	V-DITCH	1'	
	WTG-4 ACCESS RD	0+00	11+12	6"	34'	20'	V-DITCH	1'	
	WTG-13 ACCESS RD	0+00	5+38	6"	34'	20'	V-DITCH	1'	
	WTG-33 ACCESS RD	0+00	6+24	6"	34'	20'	V-DITCH	1'	
	WTG-22 ACCESS RD	0+00	7+09	6"	34'	20'	V-DITCH	1'	
	WTG-31 ACCESS RD	0+00	6+63	6"	34'	20'	V-DITCH	1'	
	WTG-12 ACCESS RD	0+00	7+25	6"	34'	20'	V-DITCH	1'	
	MET TOWER ACCESS RD	0+00	9+20	6"	20'	20'	V-DITCH	1'	FROM WTG 5 ACCESS ROAD
PHASE 1B	WTG-7 ACCESS RD	0+00	19+88	6"	34'	20'	2'	2'	TRANSITION FROM EXISTING 28 1/2 STREET
	WTG-20 ACCESS RD	0+00	3+59	6"	34'	20'	V-DITCH	1'	TRANSITION FROM EXISTING 28 1/2 STREET
	47TH AVE & WTG-15 ACCESS RD	0+00	41+41	6"	34'	20'	2'	2'	TRANSITION FROM EXISTING 28 1/2 STREET
	WTG-28 ACCESS RD	0+00	7+13	6"	34'	20'	V-DITCH	1'	FROM WTG 15 ACCESS ROAD
	WTG-6, 17, & 25 ACCESS RD	0+00	25+00	6"	34'	20'	2'	0.5'	
	WTG-6, 17, & 25 ACCESS RD	25+00	45+53	6"	34'	20'	2'	2'	
	WTG-26 ACCESS RD	0+00	9+00	6"	34'	20'	V-DITCH	1.5'	
	WTG-26 ACCESS RD	9+00	16+00	6"	34'	20'	SEE NOTE	1.5'	V-DITCH ON EAST SIDE, 10' BOTTOM ON WEST SIDE
	WTG-26 ACCESS RD	16+00	27+59	6"	34'	20'	V-DITCH	1.5'	
	48TH AVE & WTG-9 ACCESS RD	0+00	57+48	6"	34'	20'	2'	2'	TRANSITION TO WTG 9 GRADING
	WTG-30, 10 & 27 ACCESS RD	0+00	81+91	6"	34'	20'	V-DITCH	1'	FROM 48TH AVE ACCESS ROAD
	WTG-2 ACCESS RD	0+00	8+69	6"	34'	20'	V-DITCH	1'	FROM WTG 30-10-27 ACCESS ROAD
	WTG-1 ACCESS RD	0+00	7+89	6"	34'	20'	V-DITCH	1'	FROM WTG 30-10-27 ACCESS ROAD
	WTG-11 ACCESS RD	0+00	31+68	6"	34'	20'	V-DITCH	1'	FROM 48TH AVE ACCESS ROAD

NOTES

1. SEE DRAWING S3000 FOR GENERAL NOTES, LEGEND AND ABBREVIATIONS.

REGISTERED PROFESSIONAL ENGINEER
RONALD E. GULLICKS
28990
DATE 14/MAR/11
REV.5
NORTH DAKOTA

NO.	DATE	REVISION DESCRIPTION	BY	APPROVED
5	9-16-11	CONSTRUCTION REVISIONS, W.O.#17480 NO CHANGES	NJG	REB
4	14/MAR/11	REVISED PER ECN N-S-0005	SMC	JMS
3	27/MAY/10	REVISED PER ECN N-S-0003	RDN	JMS

THIS DOCUMENT WAS ORIGINALLY ISSUED AND SEALED BY DALE S. LINDBERG JR., REGISTRATION NUMBER 1973 ON OCTOBER 5, 2009 AND THE ORIGINAL DOCUMENTS ARE STORED WITH MINNESOTA POWER, AT 30 WEST SUPERIOR STREET, DULUTH, MN 55802.

BLACK & VEATCH CORPORATION

ENGINEER	RDN	DRAWN	PJK
CHECKED	JMS	DATE	XX/DEC/09

B&V PROJECT DRAWING NUMBER

I HEREBY CERTIFY THAT THIS DOCUMENT WAS PREPARED BY ME OR UNDER MY DIRECT SUPERVISION AND THAT I AM A DULY REGISTERED PROFESSIONAL ENGINEER UNDER THE LAWS OF THE STATE OF NORTH DAKOTA

SIGNED GUILLERMO L. STANEK

DATE 14/MAR/11 REGISTRATION NO. PE-6480

minnesota power

BISON WIND GENERATING FACILITY NEW SALEM, ND

ROADS AND PARKING-SITE DETAILS AND SECTIONS

SHEET 1 REV. 5

165233-CSTA-S3910

CADD DRAWING - FOR REPRODUCTION ONLY

SCALE:

MICROFILMED / /

CODE

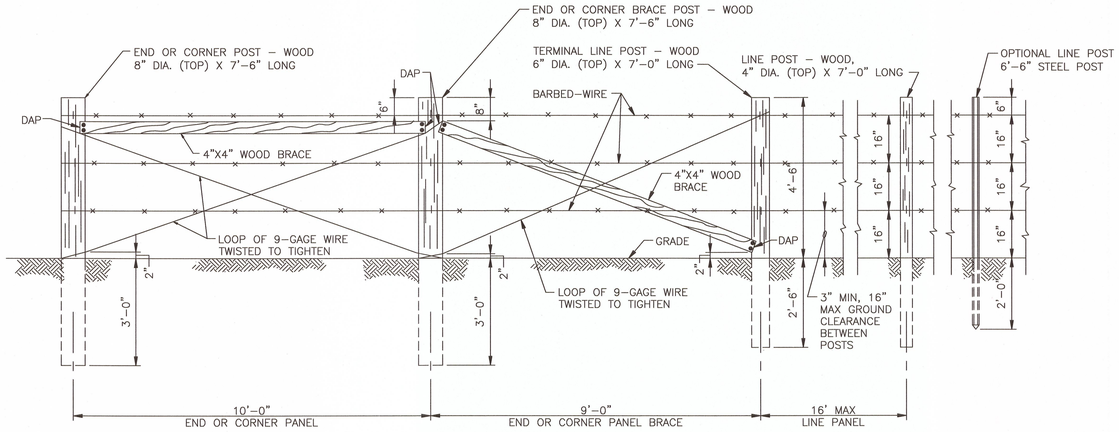

TYPICAL LAYOUT – 3 STRAND BARBED WIRE FENCE

NO SCALE

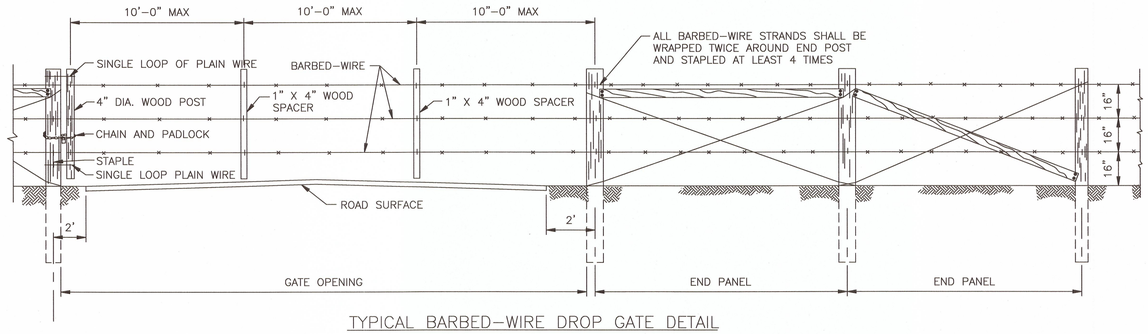

TYPICAL BARBED–WIRE DROP GATE DETAIL

NO SCALE

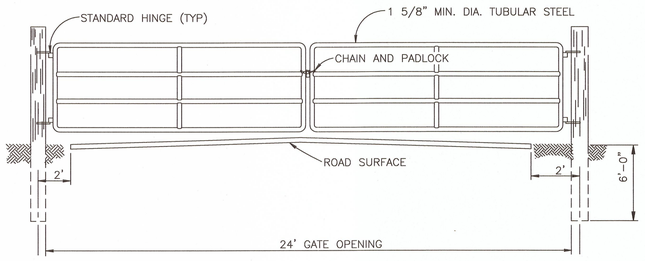

TYPICAL PANEL GATE DETAIL

NO SCALE

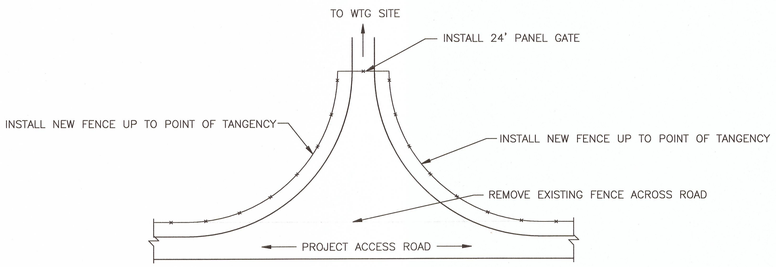

TYPICAL FENCE/GATE DETAIL FOR WTG ACCESS ROADS

(TO BE INSTALLED IN AREAS WHERE TURBINE ACCESS ROADS CROSS EXISTING FENCELINES)

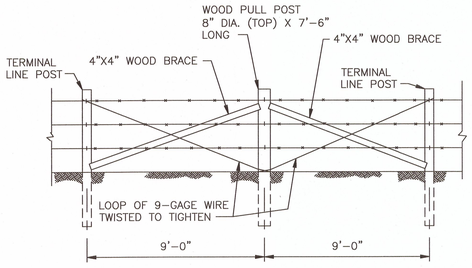

NOTE:
ALL BARBED–WIRE STRANDS SHALL BE WRAPPED TWICE AROUND PULL POST AND STAPLED AT LEAST 4 TIMES.

PULL POST BRACE PANEL DETAIL

NO SCALE

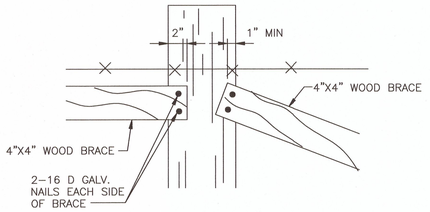

DAP DETAIL

NO SCALE

NOTES:

1. THE SPACING OF END OR CORNER PANEL AND BRACE PANEL OF 10' AND 9' IS MAXIMUM. WHEN CORNER OR END PANEL CONFLICTS WITH GATE OR CATTLE GUARD BRACE PANELS, OR TWO CORNER PANELS CONFLICT, BRACING AND SPACING OF POSTS SHALL BE ALTERED TO PROVIDE ADEQUATE BRACING AS REQUIRED.
2. THE GATE SHOWN IS TYPICAL. ANY STANDARD COMMERCIAL GATE THAT VARIES ONLY IN NON–ESSENTIAL DETAILS SHALL BE ACCEPTABLE, SUBJECT TO APPROVAL.
3. LATCH AND PIN FOR PANEL GATE IS REQUIRED, BUT NOT SHOWN.

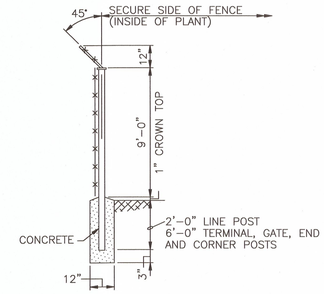

TYPICAL CHAIN LINK POST

NO SCALE

NOTE: DRIVE SET LINE POSTS

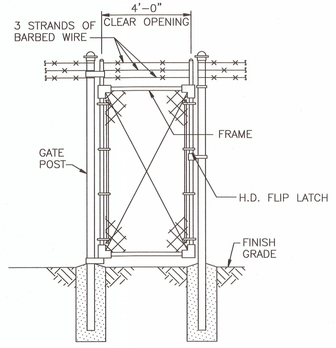

TYPICAL PERSONNEL GATE DETAIL

NO SCALE

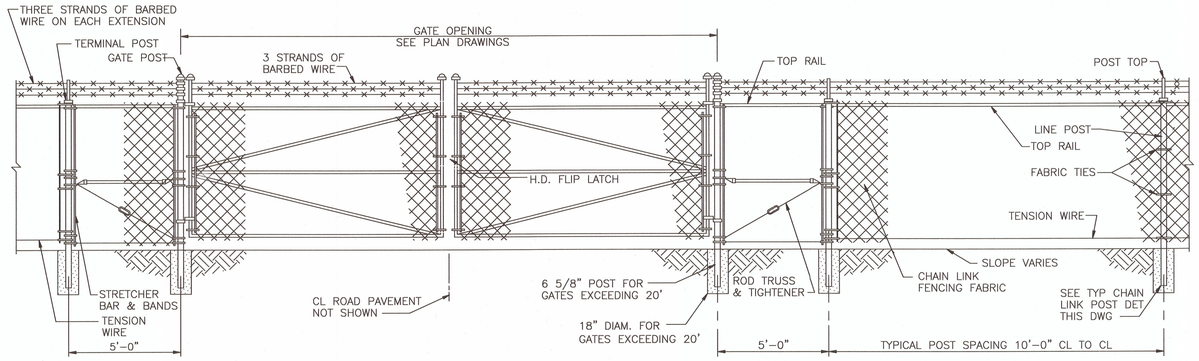

TYPICAL CHAIN LINK SECURITY FENCE WITH SWING GATE

NO SCALE

NOTES

1. SEE DRAWING S3000 FOR GENERAL NOTES, LEGEND AND ABBREVIATIONS.

NO.	DATE	REVISION DESCRIPTION	BY	APPROVED
2	12/FEB/10	REVISED PER ECN N–S–0001	RDN	JMS
1	05/OCT/09	APPROVED FOR CONSTRUCTION	RDN	JMS
3	9–16–11	CONSTRUCTION REVISIONS, W.O.#17480 NO CHANGES	NJG	

THIS DOCUMENT WAS ORIGINALLY ISSUED AND SEALED BY DALE S. LINDBERG JR., REGISTRATION NUMBER 1973 ON OCTOBER 5, 2009 AND THE ORIGINAL DOCUMENTS ARE STORED WITH MINNESOTA POWER, AT 30 WEST SUPERIOR STREET, DULUTH, MN 55802.

BLACK & VEATCH CORPORATION

ENGINEER	RDN	DRAWN	PJK
CHECKED	JMS	DATE	05/OCT/09
B&V PROJECT DRAWING NUMBER			

I HEREBY CERTIFY THAT THIS DOCUMENT WAS PREPARED BY ME OR UNDER MY DIRECT SUPERVISION AND THAT I AM A DULY REGISTERED PROFESSIONAL ENGINEER UNDER THE LAWS OF THE STATE OF NORTH DAKOTA.
SIGNED: RONALD E. GULLICKS
DATE: 14/MAR/11 PE–6480

REGISTERED PROFESSIONAL ENGINEER
RONALD E. GULLICKS
2890
DATE 1/6/12
REV.3
NORTH DAKOTA

minnesota power

BISON WIND
GENERATING FACILITY
NEW SALEM, ND

FENCING–SITE
DETAILS AND SECTIONS

SHEET 1 | REV. 3

165233–CSTA–S3915

CADD DRAWING – FOR REPRODUCTION ONLY

SCALE:

MICROFILMED / /

CODE

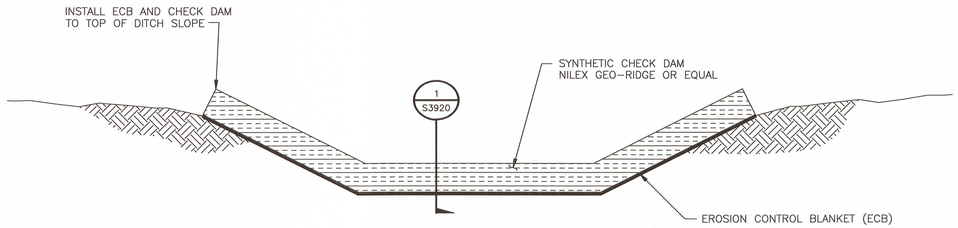

NOTE: INSTALL IN ACCORDANCE WITH MANUFACTURER'S INSTALLATION GUIDE

STANDARD SWALE WITH GEO-RIDGE CHECK DAM
NO SCALE

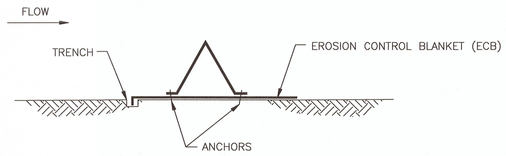

SECTION 1
GEO-RIDGE CHECK DAM DETAIL
NO SCALE
SEE THIS DWG

NOTES:
1. A SECTION OF ECB SHALL BE PLACED ACROSS THE FLOWLINE DIRECTION OF THE CHANNEL PRIOR TO THE INSTALLATION OF GEORIDGE. THE ECB SECTION MUST SPAN THE ENTIRE WIDTH OF THE CHANNEL, WHILE THE WIDTH OF THE BLANKET MUST BE AT LEAST ONE ROLL WIDTH OR NO LESS THAN 4'.

2. THE UPSTREAM EDGE OF THE ECB MUST BE SECURED IN A 4" TRENCH. SECURE THE BLANKET IN THE TRENCH USING 6" MINIMUM STAPLES PLACED AT 1.5' INTERVALS ALONG THE EDGE. BACKFILL AND RE-COMPACT THE SOIL IN THE UPSTREAM EDGE TRENCH.

3. SECURE THE DOWNSTREAM EDGE OF THE BLANKET WITH 6" MINIMUM STAPLES PLACED AT 1' INTERVALS ALONG THE EDGE.

4. PLACE THE GEORIDGE BERM IN THE MIDDLE OF THE ECB AND ANCHOR WITH 10" SPIRAL SPIKES. MINIMUM RECOMMENDATION IS 3 ANCHORS ON THE UPSTREAM SIDE AND 2 ANCHORS ON THE DOWNSTREAM SIDE. IF MULTIPLE GEORIDGE PANELS ARE USED TO SPAN A CHANNEL, ENSURE THAT THE ANCHOR HOLES LINE UP FOR OVERLAPPING PANELS.

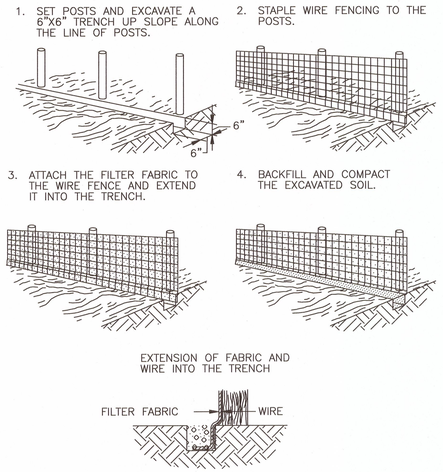

PLANS

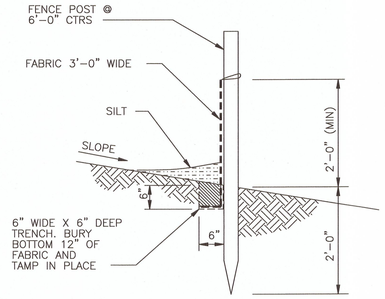

ELEVATION

SILT FENCE DETAIL
NO SCALE

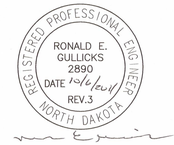

NOTES

1. SEE DRAWING S3000 FOR GENERAL NOTES, LEGEND AND ABBREVIATIONS.

NO.	DATE	REVISION DESCRIPTION	BY	APPROVED
2	12/FEB/10	REVISED PER ECN N-S-0001	RDN	JMS
1	05/OCT/09	APPROVED FOR CONSTRUCTION	RDN	JMS
3	9-16-11	CONSTRUCTION REVISIONS, W.O.#17480 NO CHANGES	NJG	REV

THIS DOCUMENT WAS ORIGINALLY ISSUED AND SEALED BY DALE S. LINDBERG JR., REGISTRATION NUMBER 1973 ON OCTOBER 5, 2009 AND THE ORIGINAL DOCUMENTS ARE STORED WITH MINNESOTA POWER, AT 30 WEST SUPERIOR STREET, DULUTH, MN 55802.

BLACK & VEATCH CORPORATION

ENGINEER	RDN	DRAWN	PJK
CHECKED	JMS	DATE	05/OCT/09

B&V PROJECT DRAWING NUMBER

I HEREBY CERTIFY THAT THIS DOCUMENT WAS PREPARED BY ME OR UNDER MY DIRECT SUPERVISION AND THAT I AM A DULY REGISTERED PROFESSIONAL ENGINEER UNDER THE LAWS OF THE STATE OF NORTH DAKOTA.

SIGNED JANET M. STANEK
DATE 14/MAR/11 LICENSE NO. PE-6480

minnesota power

BISON WIND GENERATING FACILITY NEW SALEM, ND

EROSION CONTROL-SITE DETAILS AND SECTIONS

SHEET 1 REV. 3

165233-CSTA-S3920

CADD DRAWING - FOR REPRODUCTION ONLY

SCALE:

MICROFILMED / /

CODE