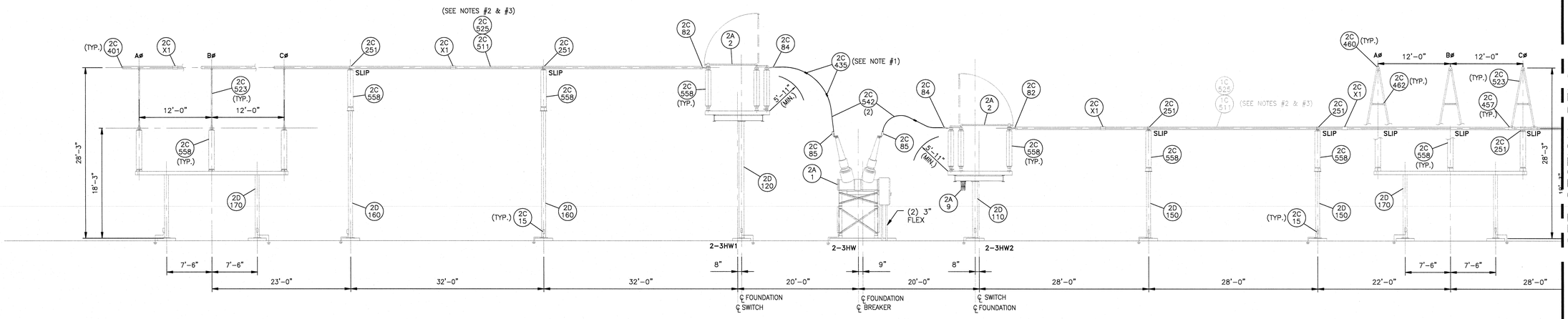

SECTION D-D

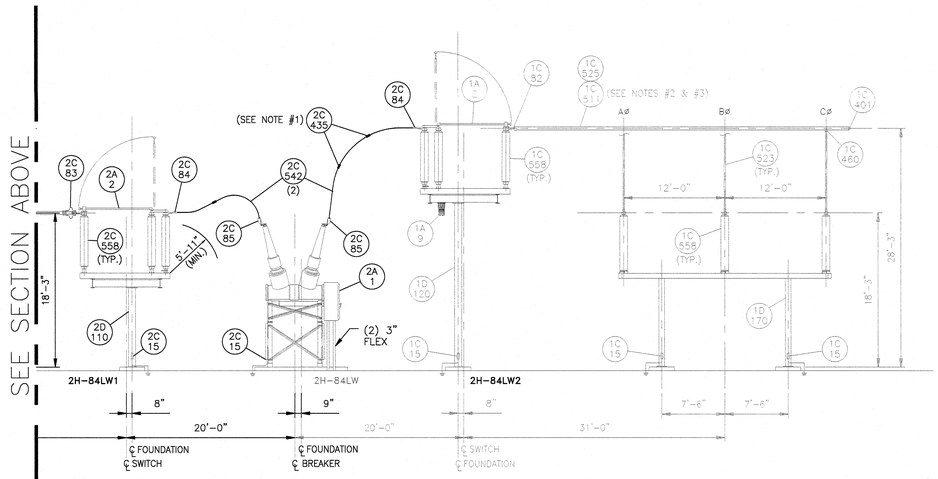

SECTION D-D

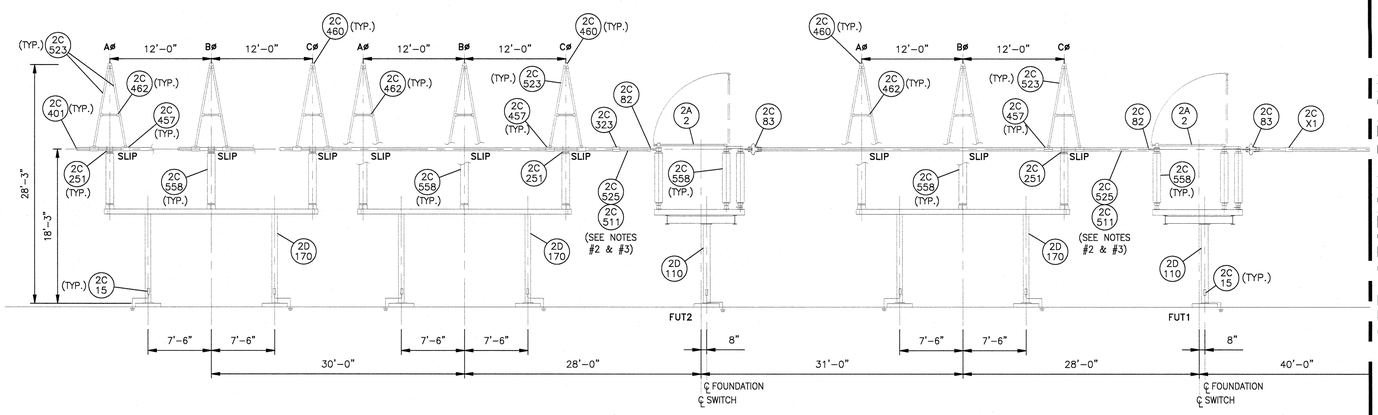

SECTION E-E

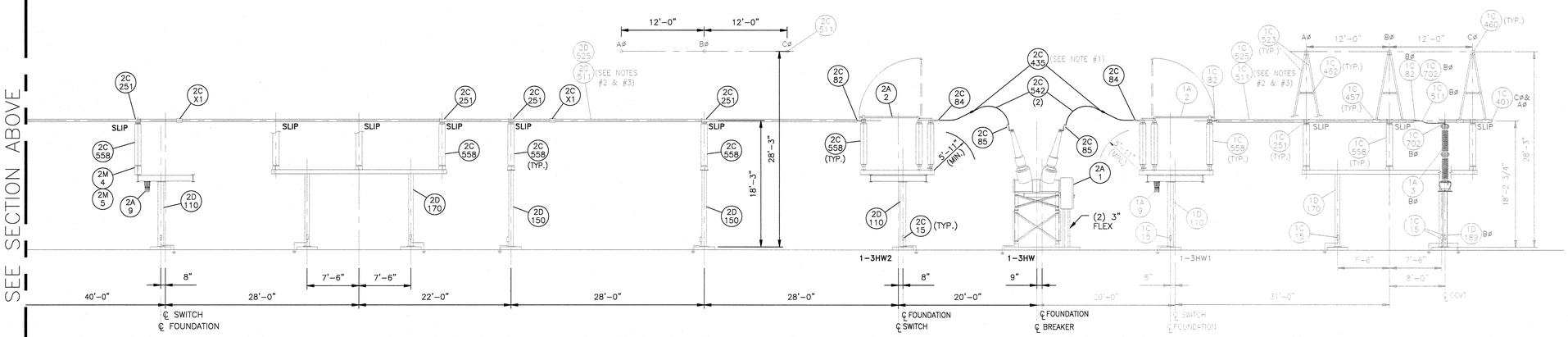

SECTION E-E

GENERAL NOTES:

1. USE CABLE SPACERS FOR 1590 MCM AAC/ACSR CONDUCTORS EVERY 5'.
2. INSTALL 336 KCMIL ACSR DAMPER WIRE IN 4" ALUMINUM BUS.
3. INSTALL CAMBER ON 4" ALUMINUM BUS.

REGISTERED PROFESSIONAL ENGINEER
KENNETH J. BENOIT
6506
DATE 3-7-13
REV.1
NORTH DAKOTA

NO.	DATE	REVISION DESCRIPTION	BY	APPROVED
.	.	.	.	.
.	.	.	.	.
.	.	.	.	.

NO.	DATE	REVISION DESCRIPTION	BY	APPROVED
.	.	.	.	.
1	3-4-13	CONSTRUCTION REVISIONS	NJG	KJB
0	03-08-12	ISSUED FOR CONSTRUCTION	NTC/B&V	CLN/B&V

BLACK & VEATCH CORPORATION

ENGINEER	NTC	DRAWN	LMCO
CHECKED	CLN	DATE	03-08-12

B&V PROJECT DRAWING NUMBER

I HEREBY CERTIFY THAT THIS DOCUMENT WAS PREPARED BY ME OR UNDER MY DIRECT SUPERVISION AND THAT I AM A DULY REGISTERED PROFESSIONAL ENGINEER UNDER THE LAWS OF THE STATE OF NORTH DAKOTA.

SIGNED CHRIS INGRAM (REV. 0)
DATE 03-08-12 B&V JOB NO. 6478

minnesota power

BISON WIND GENERATING FACILITY NEW SALEM, ND

BISON 230kV SUBSTATION ELECTRICAL PLAN & ELEVATIONS SECTIONS D-D AND E-E

SHEET 4 REV. 1

ME-32815-17

SCALE: 1/8"=1'-0" MICROFILMED / / CODE BIS 3500 3010

CADD DRAWING – FOR REPRODUCTION ONLY

ImageSite: WIND_PROJECTS