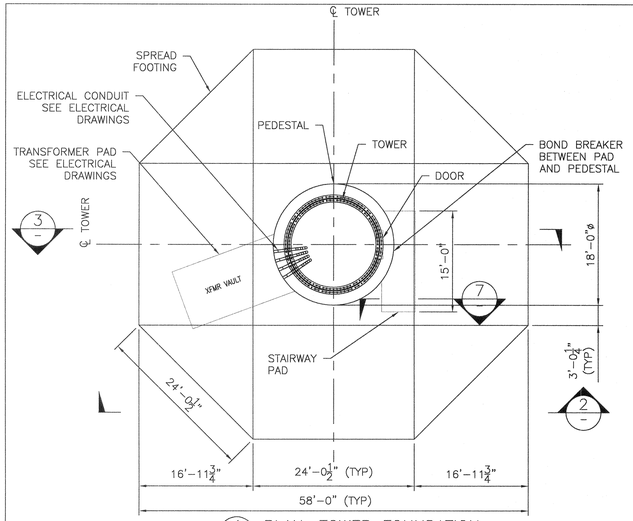

1 PLAN: TOWER FOUNDATION
3/32"=1'-0"
0 1 5 10 15
SCALE IN FEET

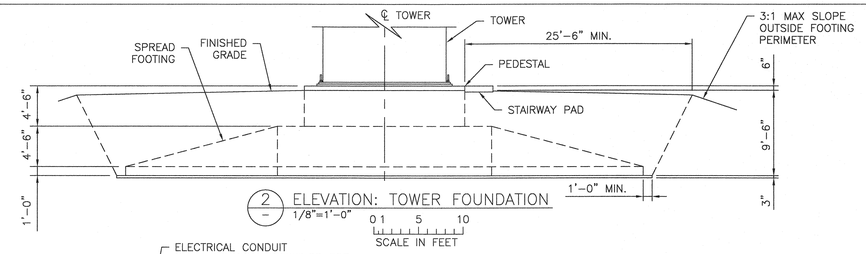

2 ELEVATION: TOWER FOUNDATION
1/8"=1'-0"
0 1 5 10
SCALE IN FEET

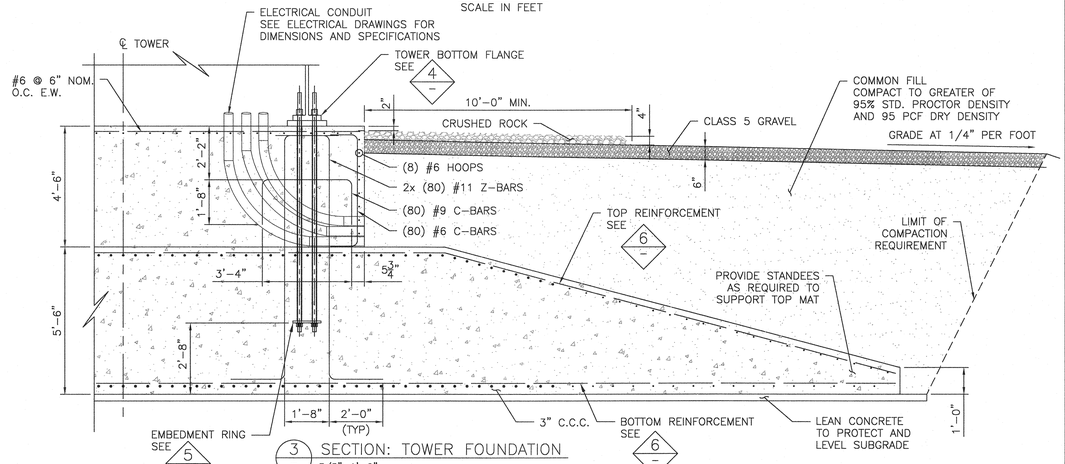

3 SECTION: TOWER FOUNDATION
3/8"=1'-0"
0 2 4 6
SCALE IN FEET

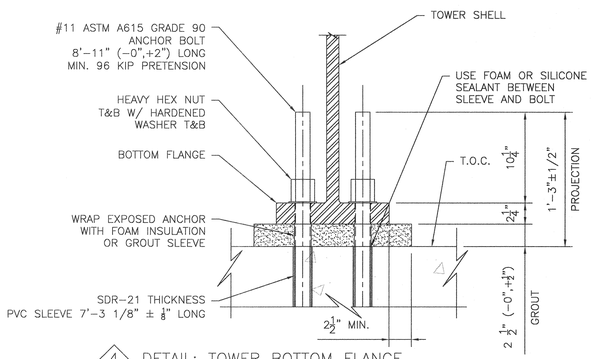

4 DETAIL: TOWER BOTTOM FLANGE
1 1/2"=1'-0"
0 3" 6" 9" 1' 2'
SCALE

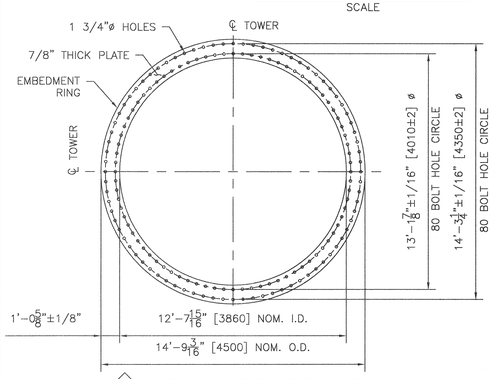

5 DETAIL: EMBEDMENT RING
1/4"=1'-0"
0 1 5
SCALE IN FEET

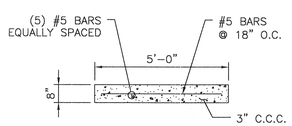

7 SECTION: STAIRWAY PAD
3/8"=1'-0"
0 2 4 6
SCALE IN FEET

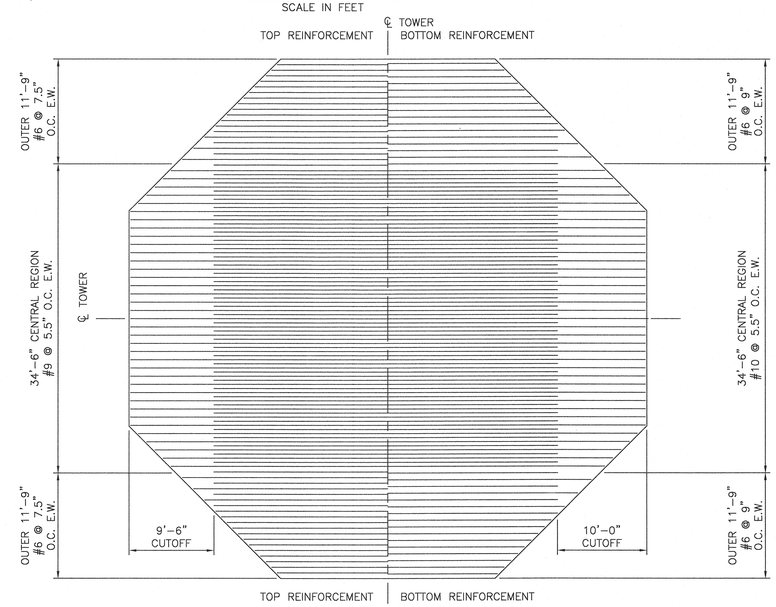

6 DETAIL: TOP & BOTTOM REINFORCEMENT
1/8"=1'-0"
0 1 5 10
SCALE IN FEET

BUILDING AND DESIGN CODES:

INTERNATIONAL BUILDING CODE 2009, INTERNATIONAL CONFERENCE OF BUILDING OFFICIALS.

BUILDING CODE REQUIREMENTS FOR STRUCTURAL CONCRETE, ACI 318, 2008, AMERICAN CONCRETE INSTITUTE.

WIND TURBINE AND TOWER:

MANUFACTURER: SIEMENS
MODEL: SWT-3.0-101-DD
POWER OUTPUT: 3.0 MW
TURBINE HUB HEIGHT: 79.5m

DESIGN SERVICE LOADS:

UNFACTORED SERVICE LOADS DUE TO ABNORMAL EXTREME LOAD:
DLC 6.2 LOAD FACTOR = 1.1

OVERTURNING MOMENT, Mxy = 62,500 kN-m = 46,098 ft-kips
HORIZONTAL BASE SHEAR, Hxy = 860 kN = 193 kips
VERTICAL TOWER LOAD, Wz = 2,900 kN = 652 kips

UNFACTORED SURVICE LOADS DUE TO EXTREME WIND LOADS:
DLC 6.1 LOAD FACTOR = 1.35

OVERTURNING MOMENT, Mxy = 49,800 kN-m = 36,731 ft-kips
HORIZONTAL BASE SHEAR, Hxy = 720 kN = 162 kips
VERTICAL TOWER LOAD, Wz = 2,900 kN = 652 kips

FOUNDATION DESIGN DATA:

MIN. FACTOR OF SAFETY AGAINST OVERTURNING: >1.5
MIN. FACTOR OF SAFETY AGAINST SLIDING: >1.5
MIN. FACTOR OF SAFETY AGAINST BEARING CAPACITY FAILURE: >2.26 ON EXTREME

REFERENCE DOCUMENTS:

1. SIEMENS WIND POWER A/S, "SWT-30-101, 79.5M FOUNDATION LOADS FOR BISON WIND II, USA", REV: 00, DATED 20110224, DOCUMENT ID: PG-R3-40-EUS00255-4386-00.

2. BARR ENGINEERING COMPANY, "GEOTECHNICAL ENGINEERING REPORT, BISON II WIND PROJECT, MINNESOTA POWER", DATED JULY 2011.

MIN. 28-DAY COMPRESSIVE STRENGTH OF CONCRETE:
5000 PSI

MIN. YIELD POINT STRENGTH OF REINFORCING BAR:
60 KSI

MIN. STRENGTH OF ANCHOR BOLTS:
TENSILE STRENGTH 120 KSI YIELD STRENGTH 90 KSI

MIN. GROUT 28-DAY COMPRESSIVE STRENGTH:
10,000 PSI

MIN. YIELD POINT STRENGTH OF EMBEDMENT PLATE:
36 KSI

VOLUME OF FOUNDATION AS DIMENSIONED:
410 CUBIC YARDS

ESTIMATED WEIGHT OF STEEL REINFORCING:
39.0 TONS

ABBREVIATIONS:

B.O.	BOTTOM OF	O.C.	ON CENTER
C.C.C.	CLEAR CONCRETE COVER	O.D.	OUTSIDE DIAMETER
℄	CENTER LINE	R	RADIUS
EL.	ELEVATION	T&B	TOP AND BOTTOM
E.W.	EACH WAY	T.O.C.	TOP OF CONCRETE
EX.	EXISTING	TYP	TYPICAL
I.D.	INSIDE DIAMETER	UNO	UNLESS NOTED OTHERWISE
MIN.	MINIMUM	W/	WITH
NOM.	NOMINAL	ø	DIAMETER

CONFIDENTIAL

THIS DRAWING IS THE PROPERTY OF BARR ENGINEERING COMPANY (BARR) AND MINNESOTA POWER (MP). NO OTHER USE IS PERMITTED WITHOUT THE WRITTEN PERMISSION OF BARR AND MP. ALL RIGHTS OF DESIGN OR INVENTION ARE RESERVED.

NO.	BY	CHK.	APP.	DATE	REVISION DESCRIPTION
A	DMH2	JXB	JXB	7/1/11	30% SUBMITTAL DESIGN
B	JAD2	JXB	JXB	7/18/11	60% DESIGN SUBMITTAL
C	DMH2	JAD2	JXB	8/19/11	90% DESIGN SUBMITTAL
0	DMH2	JAD2	JXB	9/15/11	ISSUED FOR CONSTRUCTION
1	NJG	.	.	11/15/12	CONSTRUCTION REVISIONS

REGISTERED PROFESSIONAL ENGINEER MATTHEW T. FREDDENRICH 8225 DATE REV.1 NORTH DAKOTA
12/6/12

RELEASED TO/FOR	A	B	C	0	1	2	3
CLIENT	7/1	7/18	8/19				
BID							
CONSTRUCTION				9/15			
DATE RELEASED							

BARR
Corporate Headquarters: Minneapolis, Minnesota Ph: 1-800-632-2277

Project Office:
BARR ENGINEERING CO.
4700 WEST 77TH STREET
MINNEAPOLIS, MN.
55435-4803
Ph: 1-800-632-2277
Fax: (952) 832-2601
www.barr.com

Scale	AS SHOWN
Date	4/29/11
Drawn	DMH2
Checked	JXB
Designed	DMH2
Approved	JXB

minnesota power AN ALLETE COMPANY

Bison

A WIND ENERGY INITIATIVE OF MINNESOTA POWER IN NORTH DAKOTA

BISON 3 WIND PROJECT
MORTON & OLIVER COUNTIES, NORTH DAKOTA

SPREAD FOOTING FOUNDATION
PLAN, ELEVATION, SECTION & DETAILS

BARR PROJECT No. 34/30-1006
CLIENT PROJECT No. –
DWG. No. S-01
REV. No. 1

Images in Drawing –