Storm Sewer plan. | 133 S Bell St | 5/6/2015

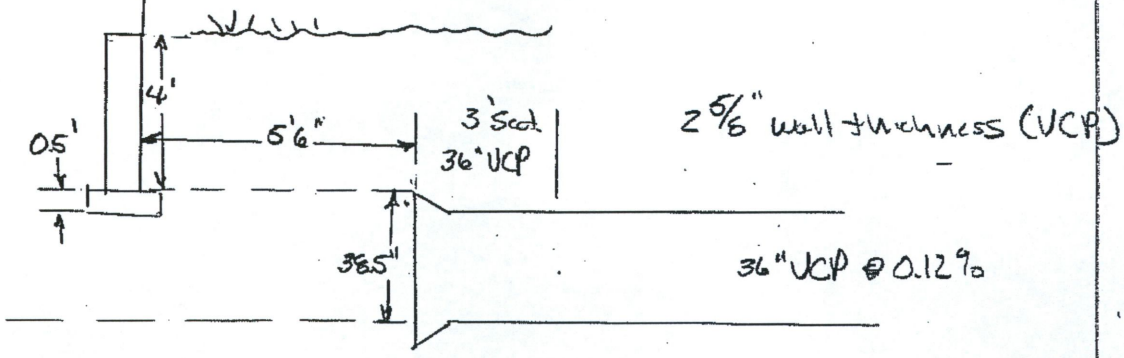

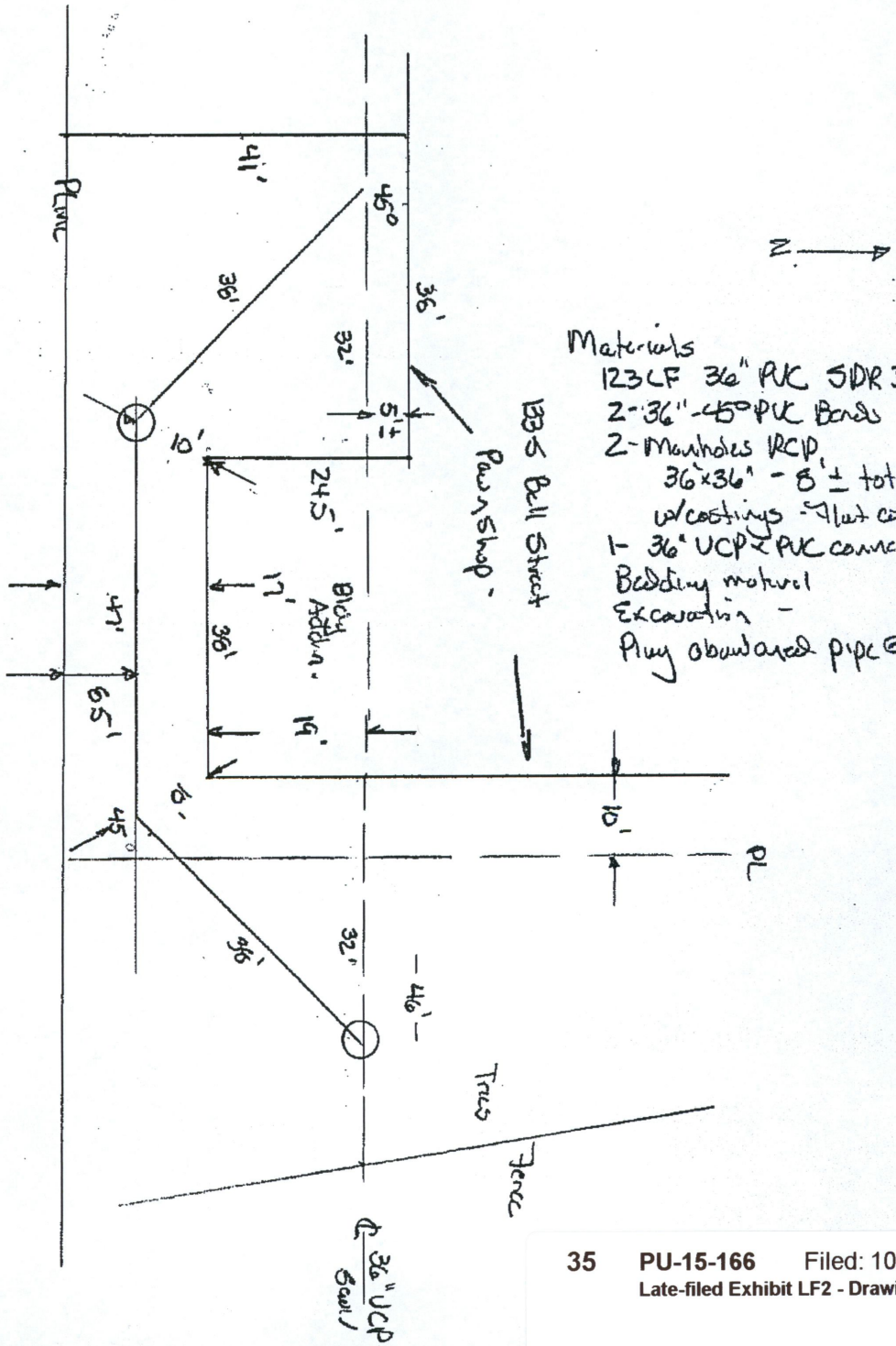

STAEDTLER® No. 937 811E Engineer's Computation Pad

tabbies EXHIBIT LF2

35 PU-15-166 Filed: 10/18/2016 Pages: 1
Late-filed Exhibit LF2 - Drawing of excavation

Public Service Commission