## CAISSON SCHEDULE

| STR / FIN NUMBER | STRUCTURE HEIGHT | STRUCTURE TYPE | LINE ANGLE ( DEG) | FOUNDATION INFORMATION | | | | | | | REINFORCEMENT | | | ANCHOR BOLT ASSEMBLY INFORMATION | | | | FACTORED GROUNDLINE REACTIONS | | |
|---|---|---|---|---|---|---|---|---|---|---|---|---|---|---|---|---|---|---|---|---|
| | | | | TOP OF CONCRETE "Z" | CAISSON DIA (FT) | CAISSON EMBEDMENT "E" (FT) | CAISSON REVEAL "R" (FT) | TOTAL CAISSON LENGTH "L" (FT) | BOLT PROJECTION "P" (IN) | ESTIMATED CONCRETE VOLUME(CU.YDS) | VERTICAL BAR QTY (#9) | SHEAR TIE QTY. (#5) | SHEAR TIE SPACING "S". (IN) | BOLT QYT | BOLT CIRCLE (IN) | BOLT LENGTH (IN) | ANCHOR BOLT CAGE DWG# | SHEAR (KIP) | MOMENT (KIP-FT) | AXIAL (KIP) |
| 0147C | 65 | 230kV 3-POLE DEADEND TAP STRUCTURE (40° - 60°) | 48.58 | 2062.4 | 6 | 17 | 1 | 18 | 9 | 19 | 21 | 22 | 12 | 8 | 45 | 105 | 33455-257065AA | 29.1 | 1442.7 | 9.4 |
| 0147C | 45 | 230kV 3-POLE DEADEND TAP STRUCTURE (40° - 60°) | 48.58 | 2062.4 | 6 | 15 | 1 | 16 | 9 | 12 | 21 | 20 | 12 | 4 | 37 | 120 | 33455-257045AA | 17.6 | 691.3 | 5.3 |
| 0147D | 85 | 230kV DEADEND STRUCTURE (0° - 10°) | 0 | 2073.2 | 6 | 22 | 1 | 23 | 9 | 24 | 21 | 27 | 12 | 12 | 44 | 102 | 33455-255085AA | 36.8 | 2081 | 16.9 |
| 0147E | 80 | 230kV DEADEND STRUCTURE (25° - 45°) | 34.73 | 2073.1 | 6 | 22 | 1 | 23 | 9 | 24 | 21 | 27 | 12 | 8 | 50 | 126 | 33455-256080AA | 39 | 2002.1 | 18.8 |
| 0147F | 65 | 230kV 3-POLE DEADEND TAP STRUCTURE (90° - 110°) | 96.95 | 2068.2 | 6 | 19 | 1 | 20 | 9 | 21 | 21 | 24 | 12 | 8 | 48 | 111 | 33455-258065AA | 33.8 | 1664 | 14.2 |
| 0147F | 45 | 230kV 3-POLE DEADEND TAP STRUCTURE (90° - 110°) | 96.95 | 2068.2 | 6 | 15 | 1 | 16 | 9 | 17 | 21 | 20 | 12 | 8 | 39 | 75 | 33455-258045AA | 21.8 | 857 | 7.5 |

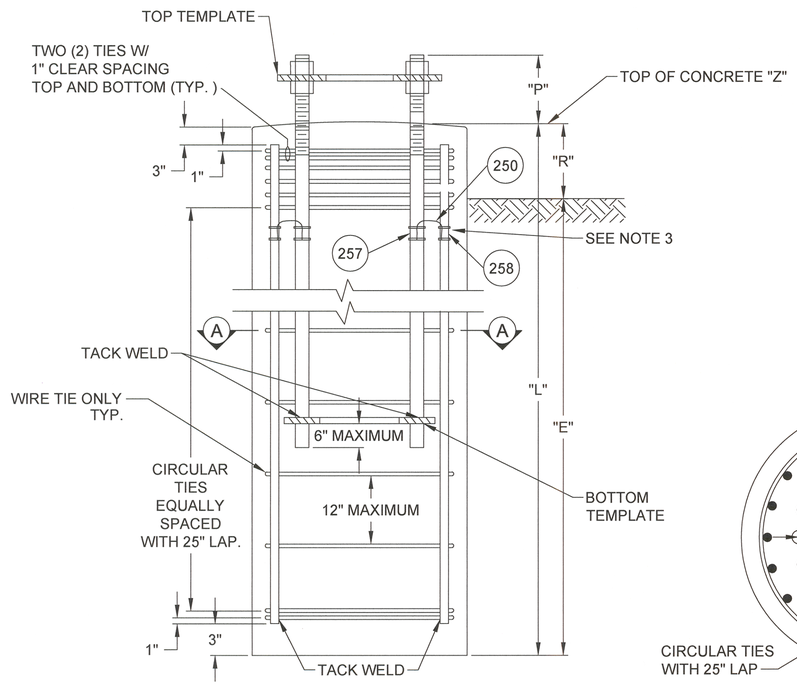


## CAISSON
## WITH TYPICAL ANCHOR BOLTS AND REINFORCING BAR CAGE

(N.T.S.)

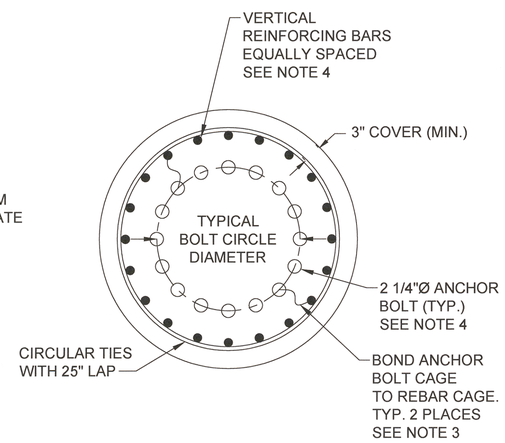


## SECTION A-A

CAISSON (N.T.S.)

| BILL OF MATERIAL | | | | |
|---|---|---|---|---|
| ITEM # | QTY | UNIT | DESCRIPTION | MANUFACTURER/ PART # |
| 250 | 10 | FT | CONDUCTOR: #4 SOLID HARD DRAWN COPPER, DIAMETER 0.2043", ASTM B1 | ALL MAKES |
| 257 | 2 | EA | GROUNDING CONNECTOR-CABLE TO ROD (2"- 2-3/8" - 1-1/2") - TAP ) 4- 2/0 AWG) | BURNDY GAR 1826 |
| 258 | 2 | EA | GROUNDING CONNECTOR-CABLE TO ROD (1-3/8" - 1-1/2") - TAP ) 4- 2/0 AWG) | BURNDY GAR 1526 |

## NOTES:

1. FOUNDATION INSTALLATION SHALL BE IN ACCORDANCE WITH PROJECT CAISSON INSTALLATION SPECIFICATION. SPECIFICATIONS SHALL GOVERN IN THE EVENT OF A CONFLICT BETWEEN THE SPECIFICATIONS AND THESE NOTES.
2. IT IS THE CONTRACTOR'S RESPONSIBILITY TO CLEAR ALL POSSIBLE UNDERGROUND CONFLICTS PRIOR TO EXCAVATION. CALL 811 OR 1-800-795-0555 PRIOR TO ANY EXCAVATION.
3. CONTRACTOR TO BOND ANCHOR BOLT CAGE TO REBAR CAGE IN TWO PLACES, ON OPPOSITE SIDES OF FOUNDATION.
4. ANCHOR BOLTS, VERTICAL REINFORCING BARS, AND CAISSON DIMENSIONS & QUANTITIES ARE SHOWN IN THE TABLE ABOVE.
5. ALL CIRCULAR TIE LAP SPLICE LOCATIONS SHALL BE STAGGERED 180° BETWEEN ADJACENT TIES ALONG THE LENGTH OF THE REINFORCEMENT CAGE.
6. QUANTITIES SUPPLIED IN BILL OF MATERIAL ARE PER FOUNDATION.

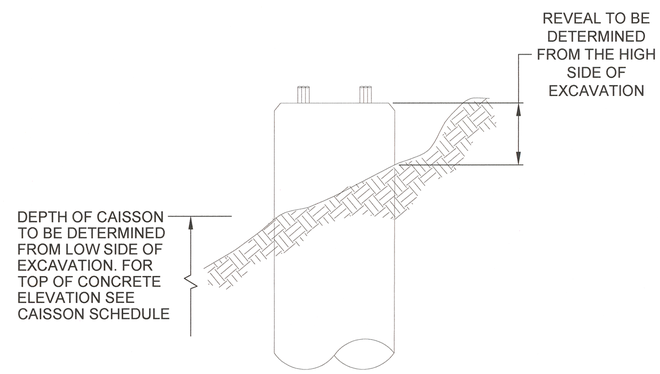


GENERAL DETAIL

Know what's below. Call before you dig.

| NO | DATE | REVISIONS AND RECORD OF ISSUE | DRWN | REV'D | APPR | COMP |
|---|---|---|---|---|---|---|
| -- | | | | | | |
| -- | | | | | | |
| -- | | | | | | |
| -- | | | | | | |
| -- | | | | | | |
| -- | | | | | | |
| -- | | | | | | |
| 0 | 06/22/16 | ISSUED FOR CONSTRUCTION | NJT | JDJ | KVP | S&L |

SCALE: NONE

PREP: NJT CHKD: JDJ
APPD: KVP DATE: 06/22/16

REGISTERED PROFESSIONAL ENGINEER — KUNHAL VINAY PARIKH — PE-10449 — DATE 6-22-16 — NORTH DAKOTA

CONTRACTOR/INSTALLER SHALL TAKE ALL APPROPRIATE PRECAUTIONS TO ENSURE THE SAFETY OF ALL PEOPLE LOCATED ON THE WORK SITE; INCLUDING CONTRACTOR'S /INSTALLER'S PERSONNEL (OR THAT OF IT'S SUB-CONTRACTOR(S)) PERFORMING THE WORK.

ANY MODIFICATION OR ADDITION TO THIS DRAWING BY ANY ORGANIZATION OTHER THAN SARGENT & LUNDY IS NOT THE RESPONSIBILITY OF SARGENT & LUNDY.

Sargent & Lundy LLC
55 EAST MONROE ST., CHICAGO, ILL.

NEXTera ENERGY RESOURCES

NEXTERA ENERGY RESOURCES, LLC
OLIVER WIND III, LLC
CAISSON SCHEDULE

13139-028-T1-0401