Joint Minot Load Serving Study

FINAL REPORT.

Xcel Energy Services; Transmission Planning

Jeremy Severson Basin Electric Power Cooperative

David Brauch Xcel Energy

Philip Westby Basin Electric Power Cooperative

March 27, 2015

EXHIBIT
7

Contents.

1.0: Background & Scope of Study. 3
2.0: Conclusions & Recommended Plan. 4
3.0: Study History & Participants. 4
3.1: Study History 4
3.2: Study Participants 5
4.0: Analysis. 5
4.1: NERC Criteria 5
4.2: Models Development. 5
4.3: Options evaluated. 6
4.4: Performance evaluation methods. 7
5.0: Results of detailed analyses. 8
5.1: Powerflow (system intact & contingency). 8
5.2: Bulk Transmission Analysis 20
5.3: Distribution Transmisison Analysis 20
5.4: Dynamic Stability. 20
5.5: Constrained Interface Analysis 20
5.6: Reactive Power Requirements. 20
5.7: Losses: Technical Evaluation. 22
5.8: Losses: Economic Evaluation. 22
6.0: Economic Analysis. 23
7.0: Relevant Concerns. 24
7.1: Load-Serving Issues. 24
7.2: Constructability & Schedule Considerations. 25
7.3: Double-Circuit Line Considerations. 25
7.4: Joint Ownership Considerations. 25
8.0: Detailed Listing of Recommended and System Alternative Plans' Facilities. 26
Appendix A: Maps (Base Plan & System Alternative) 28
Appendix B: Initial Comparison of Bulk Transmission Options (ACCC). 34
Appendix C: Comparison of Base Plan and System Alternative. 44
Appendix D: Powerflow Diagrams & Log sheets. 73
Appendix E: Constrained Interface Analysis. 82
Appendix F: Power System Losses data. 82
Appendix G: Options' Components & Indicative Costs. 82
Appendix H: Incremental transfer analysis input & output. 82
Appendix I: Base Case Modeling Assumptions & Input Parameters. 82

1.0: Background & Scope of Study.

The Minot area is located in the north central part of North Dakota. The purpose of this analysis is to determine a long term solution that addresses NSP's and the Integrated System's (I/S) concerns for the Minot area. The Minot area is currently served by three bulk sources which are the Lelands Olds – Logan 230 kV line, the McHenry – Coal Creek Tap 230 kV line, and the Garrison – Max – Mallard 115 kV line with transformation at McHenry and Logan. The Minot area has four 115 kV load serving substations SW Minot, Souris, Mallard, and Ruthville.

NSP serves the city of Minot load from its Souris substation. NSP distribution has identified the potential need for a new substation closer to the western part of town to pick up new load growth as well as offload the existing Souris substation in the 2020 timeframe. NSP also has category C3 overloads and low voltage issues for the Minot area. Currently, there is an operator armed under voltage load shedding scheme installed at Souris substation to mitigate these issues.

The Integrated System provides the bulk power delivery for Basin Electric's Class A member Central Power Electric Cooperative at the Mallard, Logan, and SWMINOT 115 kV deliveries. Central Power supplies Verendrye Electric Power Cooperative with the power to serve their portions of the surrounding Minot Community and the Minot Air Force base, which is served from the Ruthville 115 kV substation. Continued load growth is stressing the local transmission system, and out year transmission planning cases are showing low voltage and thermal overloads that will need to be mitigated. Furthermore it is getting increasingly difficult for operations to take maintenance outages in the area without putting load at a greater risk. The Minot area is defined by the substations located in the green area and the yellow area contains the monitored lines and substations.

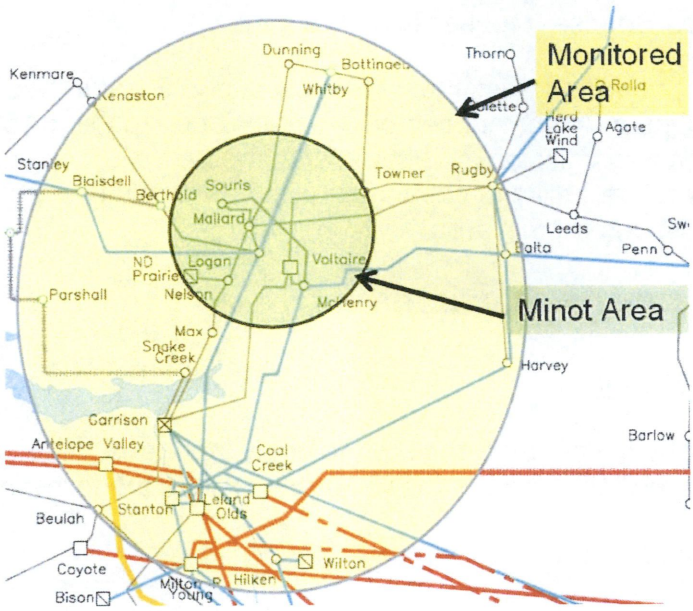

The scope of this study is to determine solution options that will sufficiently address NSP and I/S concerns for this area.

2.0: Conclusions & Recommended Plan.

The preferred option as result of the study work is referred to as option A. This option includes the following:

- A new 230 kV line from McHenry up to Minot with a new 230/115 kV substation referred to as Ward County
- Convert the existing Logan – Mallard 115 to 230 kV and terminate at Ward County
- Construct an in and out of the McHenry – Souris 115 kV line into Ward County
- Construct an in and out of the Nelson Tap - Mallard 115 kV line into Logan
- Rebuild both Ward County – Souris 115 kV lines

This report recommends construction and interconnection of a Mouse River substation to serve growing loads in the western portion of the city. NSP distribution foresees this need in the 2020 timeframe, but will monitor the load growth and adjust the need time as necessary.

- Build new 115 kV distribution substation (Mouse River)
- Construct new Mouse River – Ruthville 115 kV line
- Construct new Souris – Mouse River 115 kV line

Both option A and option B address most category A and B issue that were observed on the Minot system. Option A was chosen over option B due to the greater extent in which the Minot area transmission is better interconnected. More interconnection of 115 kV system provides future ability to expand capacitor banks in this area to address any future low voltages issues for this area.

3.0: Study History & Participants.

3.1: Study History

There have been several studies completed recently that have identified voltage and loading violations in the Minot area. These reports include the following:

North Dakota Load Serving Capability Report

Prepared by Excel Engineering for Xcel Energy

MN TACT Region Four Annual 2013 Transmission Assessment

Prepared by Minnesota Transmission Assessment & Compliance Team

Due to the localized Minot area, this study aims to find options to mitigate transmission issues observed in previous study work.

3.2: Study Participants

Northern States Power, Xcel Energy (NSP)

Basin Electric Power Cooperative (BEPC)

Western Area Power Administration (WAPA)

4.0: Analysis.

4.1: NERC Criteria

TPL-001-0.1

TPL-002-0b

4.2: Models Development.

This analysis utilized the 2024 winter peak models from the 2013 MRO series. A winter load model was chosen due to the historical winter peaking nature for the Minot area.

The base models were modified for this analysis as noted below:

- Updated Minot area loads in 2015 and 2024
- Added 30 Mvars of capacitors at Souris substation (In service by 6/1/2016)
- Turned off the Velva, ND Prairie Wind, and Rugby wind farms
- Removed the Logan to Whitby 230 kV project and associated load
    - This project was added to the 2013 MRO models to support the spearfish oil load growth, which is no longer expected to be as large. For this reason, this project was removed for this analysis.
- Set B10T to 65 MW's north
    - B10T is the Boundary dam phase shifter that controls the flow from the Tioga 230 kV substation to the Boundary Dam 230 kV substation. For this area, the conservative case assumption is a north dispatch.

- A second model was created using the MRO 2024 winter peak case with north transfers conditions

4.3: Options evaluated.

The pressing need for the Minot area is for additional transformation and another bulk source into the area. The potential solutions, described below, are intended to address these needs. The options evaluated were broken into two main descriptors, one being a "bulk" fix due to the more regional extent of the project while the other were more localized to the city of Minot itself.

The bulk transmission options were identified by numerical descriptors and are as follows:

Option 1

- Connect the McHenry and Logan via a new 230 kV interconnection:
    - Construct a 230/115 kV substation near the Mallard substation (Ward County) with two 230/115 kV transformers
    - Construct a new 25 mile 230 kV line from McHenry to the new Ward County substation
    - Convert the existing Logan – Mallard 115 kV line to 230 and bring into the new Ward County substation.

Option 2

- Connect McHenry to the coal fields via a new 230 kV up from Stanton
    - New 230/115 kV substation near Mallard substation (Ward County) with two 230/115 kV transformers
    - Construct a new 25 mile 230 kV line from McHenry to the new Ward County substation
    - Construct a new 60 mile 230 kV line from Stanton to the new Ward County substation

Option 3

- Convert 60 miles Garrison – McHenry 115 kV into Garrison to Logan 230 kV
- New 20 mile 115 kV line from Logan to McHenry
- Second Logan 230/115 kV transformer

In addition to the bulk options analyzed there were several "distribution" options studied for direct service into and around the Minot area. These options are referred to via an alphabetical identifier. Two options were developed to be combined with the above bulk option and are as follows:

Minot area distribution transmission options

Option A - Souris – Mouse River – Ruthville 115 kV loop

- Build new 115 kV distribution substation (Mouse River)
- Construct new Mouse River – Ruthville 115 kV line
- Construct new Souris – Mouse River 115 kV line
- Rebuild both Ward County – Souris 115 kV lines
- Construct an in and out of the McHenry – Souris 115 kV line into Ward County
- Construct an in and out of the Nelson Tap - Mallard 115 kV line into Logan

Option B – Ward County – Mouse River – Ruthville 115 kV Loop

- Build new 115 kV distribution substation (Mouse River)
- Construct new Ward County – Mouse River 115 kV line
- Construct new Mouse River – Ruthville 115 kV line
- Construct an in and out of the McHenry – Souris 115 kV line into Ward County
- Construct an in and out of the Nelson Tap - Mallard 115 kV line into Logan

For initial bulk transmission screening purposes of options 1 and 2, option A was used as the distribution option for initial comparisons.

4.4: Performance evaluation methods.

The bulk transmission options were assessed by performing an ACCC analysis with Category A and B contingencies. The results of each option were then compared to determine the performance of each option relative to each other.

The following criteria to evaluate all options are below.

	NSP Bus Voltage	I/S Bus Voltage	NSP Thermal Ratings	I/S Thermal Ratings
System Intact	.95 - 1.05 p.u.	.95 - 1.05 p.u.	100% Rate A	100% Rate A
N-1 contingency	.92 - 1.05 p.u.	.95 - 1.05 p.u.	100% Rate A	100% Rate A
N-1-1 Contingency	.92 - 1.05 p.u.	N/A	100% Rate B	N/A

5.0: Results of detailed analyses.

5.1: Powerflow (system intact & contingency).

Base Model System Intact

This study begins by identifying the long term voltage or thermal issues in the Minot area given the current transmission system. The table below contains the system intact voltages for the load serving buses in the Minot Area in the base 2024 winter peak model with north transfers. The 2024 winter peak model is used for this analysis since this is the most stressed condition for the Minot area.

Minot Area Load Serving Bus Voltages

2024 Winter Peak Model with North Transfers

Substation	System Intact Voltage
603022 SOURIS 7	0.946
603023 MALLARD7	0.949
659165 RUTHVILLECP7	0.925
659307 SWMINOT CP7	0.953

Most of these voltages are in violation of NSP and IS system intact criteria. The 2024 base model also shows system intact thermal issues on the Logan and McHenry transformers as they are loaded above 100 percent of their normal ratings. These thermal issues are shown in the table below.

Minot Area Thermal Issues

2024 Winter Peak Model with North Transfers

Element	MVA Rating	Loading %
McHenry 230/115 kV Transformer	84.0	104
Logan 230/115 kV Transformer	200.0	101.4

Base Model Contingency Analysis

A contingency analysis was also conducted for the study area. The table below shows the category B voltage violation results for the current transmission system in the Minot Area.

Minot Area Category B Flagged Voltage Issues

2024 Winter Peak Model with North Transfers

UNDERVOLTAGE Substation	Voltage	Voltage Drop	Contingency
Souris 115 kV	94.58		System Intact
	86.44	8.13	Loss of Souris to Mallard 115 kV
	80.66	13.91	Loss of Mallard to Logan 115 kV
	87.99	6.58	Loss of McHenry 230/115 kV Transformer
	89.07	5.51	Loss of Leland Olds to Logan 230 kV
	86.2	8.38	Loss of Logan 230/115 kV Transformer
	89.07	5.51	Loss of Souris – Velva – McHenry 115 kV
Mallard 115 kV	94.86		System Intact
	80.18	14.68	Loss of Mallard to Logan 115 kV
	89.54	5.32	Loss of McHenry 230/115 kV Transformer
	90.83	4.03	Loss of Balta to Rugby 230 kV
	90.66	4.2	Loss of Rugby 230/115 kV Transformer
	89.09	5.77	Loss of Leland Olds to Logan 230 kV
	86.06	8.8	Loss of Logan 230/115 kV Transformer
	90.69	4.17	Loss of Souris – Velva – McHenry 115 kV
Velva Tap 115 kV	98.88		System Intact
	94.15	4.73	Loss of Souris to Mallard 115 kV
	90.79	8.1	Loss of Mallard to Logan 115 kV
	88.38	10.51	Loss of McHenry 230/115 kV Transformer
	94	4.88	Loss of Logan 230/115 kV Transformer
Logan 230 kV	96.66		System Intact
	94.48	2.18	Loss of Mallard to Nelson 115 kV
	93.95	2.72	Loss of McHenry 230/115 kV Transformer
	94.54	2.12	Loss of Balta to Rugby 230 kV
	94.54	2.13	Loss of Rugby 230/115 kV Transformer
	94.51	2.16	Loss of Nelson to Max 115 kV
	91.15	5.51	Loss of Leland Olds to Logan 230 kV
	94.47	2.19	Loss of Souris – Velva – McHenry 115 kV
Logan 115 kV	96.23		System Intact
	93.53	2.7	Loss of Mallard to Nelson 115 kV
	92.11	4.12	Loss of McHenry 230/115 kV Transformer
	93.07	3.16	Loss of Balta to Rugby 230 kV
	92.99	3.24	Loss of Rugby 230/115 kV Transformer
	90.52	5.7	Loss of Leland Olds to Logan 230 kV
	87.08	9.15	Loss of Logan 230/115 kV Transformer
	92.97	3.26	Loss of Souris – Velva – McHenry 115 kV
Ruthville 115 kV	92.54		System Intact
	76.6	15.94	Loss of Mallard to Logan 115 kV

	86.84	5.7	Loss of McHenry 230/115 kV Transformer
	88.22	4.32	Loss of Balta to Rugby 230 kV
	88.04	4.5	Loss of Rugby 230/115 kV Transformer
	86.35	6.19	Loss of Leland Olds to Logan 230 kV
	83.07	9.48	Loss of Logan 230/115 kV Transformer
	88.07	4.47	Loss of Souris – Velva – McHenry 115 kV
SW Minot 115 kV	95.33		System Intact
	91.4	3.92	Loss of McHenry 230/115 kV Transformer
	92.35	2.97	Loss of Balta to Rugby 230 kV
	92.26	3.07	Loss of Rugby 230/115 kV Transformer
	89.69	5.64	Loss of Leland Olds to Logan 230 kV
	87	8.33	Loss of Logan 230/115 kV Transformer
	85.81	9.52	Loss of Logan to SW Minot 115 kV
	92.25	3.07	Loss of Souris – Velva – McHenry 115 kV

There are several category B contingencies that result in voltage violations for NSP's and the I/S buses. The loss of the Logan – Mallard 115 kV line, in particular, results in severely low voltages at NSP's Mallard and Souris substations. The same contingency results in the Ruthville substation approaching .75 p.u. voltage. This contingency removes the strongest source serving the Minot area load. The remaining Garrison-Max-Mallard and McHenry-Souris 115 kV lines are unable to maintain acceptable voltages. In general, contingencies involving one of the three sources into this area results in low voltage violations. A new source is needed to maintain acceptable voltages in the Minot area.

The following table shows the category B thermal violations. Most of the flagged thermal violations are on the 115 kV system serving the Minot load. Losing one of the 115 kV line in the Minot area tends to overload the other lines serving the Minot load. This is an indication that new 115 kV points of injection may be needed to offload existing 115 kV lines.

Minot Area Category B Flagged Thermal Issues

2024 Winter Peak Model with North Transfers

Circuit Element	MVA Rating	Loading Percent	Contingency
Mallard to Logan 115 kV	159.3	81.5	System Intact
		100.7	Loss of Souris to Velva Tap 115 kV
		117.7	Loss of Mallard to Nelson 115 kV
		100.5	Loss of Velva Tap to McHenry 115 kV
		103.3	Loss of McHenry to Coal Creek Tap 230 kV
		100	Loss of McHenry 230/115 kV Transformer
		100.3	Loss of Balta to Rugby 230 kV
		117.7	Loss of Nelson to Max 115 kV
		119.5	Loss of Garrison to Max 115 kV
		100.7	Loss of Souris – Velva – McHenry 115 kV
McHenry to Velva Tap 115 kV	119.5	41.1	System Intact
		102.3	Loss of Souris to Mallard 115 kV
		101.4	Loss of Mallard to Logan 115 kV

McHenry 230/115 kV Transformer	84.0	114.6	System Intact
		160.4	Loss of Souris to Mallard 115 kV
		178.7	Loss of Mallard to Logan 115 kV
		159.3	Loss of McHenry to Balta 230 kV
		188.2	Loss of Balta to Rugby 230 kV
		154.7	Loss of Rugby 230/115 kV Transformer
		145.4	Loss of Garrison to Voltaire 115 kV
		157.8	Loss of Leland Olds to Logan 230 kV
		165	Loss of Logan 230/115 kV Transformer
Garrison to Voltaire 115 kV	109.0	77.2	System Intact
		102.3	Loss of McHenry to Coal Creek Tap 230 kV
Logan 230/115 kV Transformer	200.0	101.4	System Intact
		113	Loss of Souris to Velva Tap 115 kV
		124.6	Loss of Mallard to Nelson 115 kV
		112.9	Loss of Velva Tap to McHenry 115 kV
		116.2	Loss of McHenry to Coal Creek 230 kV
		112.9	Loss of Balta to Rugby 230 kV
		124.6	Loss of Nelson to Max 115 kV
		125.8	Loss of Garrison to Max 115 kV
		115.9	Loss of Logan to Blaisdell 230 kV
		113	Loss of Souris – Velva – McHenry 115 kV

5.2: Bulk Option Analysis

The full analysis of the base transmission system shown above as well as previous studies indicates the need for an additional high voltage source into the Minot area. Three potential solutions were considered for this analysis. The first step was to screen the potential solutions to determine which option demonstrated the best performance. Other considerations, such as costs and constructability were considered in determination of the overall best solution. The options as laid out in section 4.4 of the report include:

Option 1: Joint NSP and Integrated System solution

Option 2: NSP solution

Option 3: Integrated System solution.

Minot Area Load Serving Bus Voltages (System Intact)

2024 Winter Peak Model with North Transfers

	Option 1	Option 2	Option 3
Logan 230 kV bus	0.984	0.995	0.995
McHenry 230 kV bus	0.992	1.007	0.999
Ward County 230 kV bus	0.984	1.006	N/A
Mallard 115 kV bus	0.982	0.999	0.978
Ruthville 115 kV bus	0.968	0.986	0.957

Souris 115 kV bus	0.98	0.999	0.973
SW Minot 115 kV bus	0.975	0.99	0.985

The system intact voltages of Minot area buses are shown here with the 3 bulk transmission solutions applied. Option 2 generally has best voltage performance out of all three options with option 1 generally performing better than option 3.

Minot Area Transformer Thermal Loading (System Intact)

2024 Winter Peak Model with North Transfers

	MVA Rating	Option 1 Loading %	Option 2 Loading %	Option 3 Loading %
McHenry 230/115 kV Transformer	84	89	86	102
Logan 230/115 kV #1 Transformer	200	54	77	80
Logan 230/115 kV #2 Transformer (new)	200	N/A	N/A	80
Ward County 230/115 kV #1 (new)	336	23	21	N/A
Ward County 230/115 kV #2 (new)	336	23	21	N/A

The system intact loading for the transformers serving the Minot area are shown above for all three bulk transmission options. The option that does the overall best job of reducing transformer loading is Option 1. Option 3 has inadequate performance in reducing the loading on the McHenry transformer, while option 2 doesn't provide as much relief of the Logan transformer as option 1.

A full category B contingency analysis was performed on all three bulk transmission options. Only the 200 kV and above elements were monitored, including the 230/115 kV transformers. This is due to certain options that require changes to the 115 kV system to implement the bulk option that may skew the results. Also, the primary purpose of this screening is to determine which option addresses the transformation deficiency and voltages performance of the 230 kV buses. The condensed flagged results are shown in the table below. The table indicates the worst case loading and the number of contingencies that resulted in a loading violation. The full ACCC results table is included in appendix B. All three options had acceptable voltage performances on the 200 kV and above. Option 3 had the poorest thermal performance with respect to options 1 and 2. Option 1 and 2 had similar performance results.

Minot Area Category B Flagged Thermal Violations Bulk Transmission Options (ACCC)

2024 Winter Peak Model with North Transfers

Element	Bulk Base Case	Bulk Option 1	Bulk Option 2	Bulk Option 3
McHenry 230/115 kV Transformer	84 MVA	84 MVA	84 MVA	84 MVA
Worst Overload Percent	185.40%	130.30%	124.00%	171.20%
Total Contingencies with Violation	73	4	3	60
Logan 230/115 kV Transformer	200 MVA	200 MVA	200 MVA	200 MVA
Worst Overload Percent	119.10%	No Violations	No Violations	135.50%
Total Contingencies with Violation	20			1
Blaisdell 230/115 kV Transformer	166 MVA	166 MVA	166 MVA	166 MVA

Worst Overload Percent	124.00%	113.00%	115.60%	117.00%
Total Contingencies with Violation	2	1	2	1

The best overall bulk solution for the Minot area is option 1. Option 3 had the poorest system intact and contingency performance of the three bulk transmission solutions considered. While option 2 had a slightly better system intact voltage profile than option 1, option 1 can achieve the same performance with the installation of an 80 Mvar capacitor bank on the Ward County 230 kV bus. The cost difference of option 1 versus option 2 is quite considerable. Option 2 requires approximately 60+ miles of additional new 230 kV line than option 1. This makes option 2 substantially less desirable considering the performance of option 1 and option 2 are very comparable.

5.3: Distribution Option Analysis

With the regional analysis showing a need for a new source into the area, the rest of the analysis moved onto developing a distribution fix for the Minot area. This analysis proceeded by assuming option 1 (Logan – McHenry 230) as the preferred bulk transmission solution. There were two local transmission options studied in the Minot area. As laid out in section 4.4 they are as follows:

Option A - Souris – Mouse River – Ruthville 115 kV loop

Option B – Ward County – Mouse River – Ruthville 115 kV Loop

Both options look at a 115 kV loop from the east end of town to a new sub coined Mouse River and up to the Central Power Ruthville substation. The difference between the two options is whether the 115 kV line to Mouse River is terminated at Souris (going straight through the city of Minot) or at the new Ward County 115 kV sub (going around the south end of town).

5.3.1: Option A

The first option analyzed looked at originating the 115 kV line from Souris and going straight through the city of Minot to a new sub on the west end of town called Mouse River. About half of the load from Souris is then shifted over to Mouse River.

Minot Area Load Serving Bus Voltages

2024 Winter Peak Model with North Transfers

Substation	System Intact Voltage
603022 SOURIS 7	0.980
603023 MALLARD7	0.982
659165 RUTHVILLECP7	0.968
659307 SWMINOT CP7	0.986
603268 MOUSE RIV (New)	0.976

This option improves the system intact voltages for the load serving buses by about four percent. Ideally, the system intact voltages should be closer to unity. The additional

transformation at the new Ward County 230/115 kV substation also relieves the loading on the Logan and McHenry transformers as shown below. Overall, Option A adequately addresses the category A violations observed in the Minot area.

Minot Area Transformer Thermal Loading

2024 Winter Peak Model with North Transfers

Element	MVA Rating	Loading %
McHenry 230/115 kV Transformer	84.0	89
Logan 230/115 kV Transformer	200.0	54
Ward County 230/115 kV #1 (new)	336	23
Ward County 230/115 kV #2 (new)	336	23

Option A Contingency Analysis

A full category B contingency analysis was performed on the study area with Option A applied. The following table shows the flagged voltage violations.

Minot Area Category B Flagged Voltage Issues Option A

2024 Winter Peak Model with North Transfers

UNDERVOLTAGE			
Substation	Voltage Percent	Voltage Drop Percentage	Contingency
Ruthville 115 kV Bus	96.79		System Intact
	94.65	2.13	Loss of Souris to Mouse River 115 kV
	91.43	5.36	Loss of Mallard to Ruthville 115 kV
	94.48	2.3	Loss of Balta to Rugby 230 kV
	94.84	1.95	Loss of the Rugby 230/115 kV Transformer
	94.26	2.53	Loss of Leland Olds to Logan 230 kV
SW Minot 115 kV Bus	97.56		System Intact
	86.93	10.63	Loss of Logan to SW Minot 115 kV

Option A cleans up most of the low voltage issues for the Minot area. However, Ruthville substation experiences low voltages for certain contingencies. The most severe of these contingencies is the loss of the Mallard – Ruthville 115 kV line. The voltage issues at Ruthville substation may be addressed with the installation of capacitor banks.

The following table shows the category B thermal violations observed for Option A. Two of the lines flagged for overloads are new proposed lines in Option A. These lines were given a rating of 100 MVA to determine the minimum rating for the conductor needed. The Mallard – Ward County 115 kV line in this case will need at least a 130+ MVA rating. The Mouse River – Ruthville 115 kV line will need at least a 101+ MVA rated line. The Mallard – Logan 115 kV line overloads with the loss of the proposed Logan – Ward County 230 kV line. This overload was found to be erroneous since the expected winter ratings for this line should be 239 MVA not 182 MVA. The most of the overloads observed on the McHenry transformer are mitigated since the McHenry transformer has a 125 percent overload capability. The loss of Balta to Rugby 230 kV line results in an

overload that exceeds the emergency capability of the McHenry transformer. Upon closer inspection of the contingency, a large Mvar flow was observed through the transformer. By locking the McHenry transformer tap closer to unity, the mvar flow decreases from 77 Mvar to 33 Mvar. This reduces the loading to 98 percent of the normal rating of the McHenry transformer. This does aggravate the observed voltage violation at Ruthville for the same contingency. By locking the McHenry tap closer to unity, the Ruthville 115 kV bus has a .938 pu voltage for the loss of Balta to Rugby 230 kV line. This issue may be best addressed by the addition of capacitor banks at Ruthville or expanding the capacitor banks at Souris.

Minot Area Category B Flagged Thermal Issues Option A

2024 Winter Peak Model with North Transfers

Circuit Element	MVA Rating	Loading Percent	Contingency
Mallard to Ward County 115 kV	100.0	45.1	System Intact
		133.4	Loss of Mallard to Logan 115 kV
		110.9	Loss of Logan 230/115 kV Transformer
Mallard to Logan 115 kV	182.0	59.4	SYSTEM INTACT
		104.3	Loss of Logan to Ward County 230 kV
Mouse River to Ruthville 115 kV	100.0	18.9	SYSTEM INTACT
		101.1	Loss of Mallard to Ruthville 115 kV
McHenry 230/115 kV Transformer	84.0	89.5	System Intact
		106.5	Loss of McHenry to Balta 230 kV
		129.5	Loss of Balta to Rugby 230 kV
		109.3	Loss of Rugby 230/115 kV Transformer
		112.4	Loss of Garrison to Voltaire 115 kV

5.3.2: Option B

The second option analyzed looked at originating the 115 kV line from Ward County and going south and around the city of Minot to a new sub on the west end of town called Mouse River. About half of the load from Souris is then shifted over to Mouse River.

Minot Area Load Serving Bus Voltages

2024 Winter Peak Model with North Transfers

Substation	System Intact Voltage
603022 SOURIS 7	0.985
603023 MALLARD7	0.983
659165 RUTHVILLECP7	0.967
659307 SWMINOT CP7	0.976
603268 MOUSE RIV (New)	0.973

This option provides similar system intact voltage improvements as Option A. As with Option A, the additional transformation at the new Ward County 230/115 kV substation

also relieves the loading on the Logan and McHenry transformers as shown below. Overall, Option B also adequately addresses the category A violations observed in the Minot area.

Minot Area Transformer Thermal Loading Option A

2024 Winter Peak Model with North Transfers

Element	MVA Rating	Loading %
McHenry 230/115 kV Transformer	84.0	89
Logan 230/115 kV Transformer	200.0	54
Ward County 230/115 kV #1 (new)	336	23
Ward County 230/115 kV #2 (new)	336	23

Option B Contingency Analysis

A full category B contingency analysis was performed on the study area with Option B applied. The table below shows flagged voltage violations.

Minot Area Category B Flagged Voltage Issues Option B

2024 Winter Peak Model with North Transfers

UNDERVOLTAGE			
Substation	Voltage Percent	Voltage Drop Percentage	Contingency
Ruthville 115 kV	96.71		System Intact
	88.87	7.83	Loss of Mallard to Ruthville 115 kV
	94.65	2.05	Loss of Mouse River to Ward County 115 kV
	94.4	2.31	Loss of Balta to Rugby 230 kV
	94.76	1.95	Loss of Rugby 230/115 kV Transformer
	94.21	2.5	Loss of Logan to Leland Olds 230 kV
SW Minot 115 kV	97.56		System Intact
	86.93	10.63	Loss of Logan to SW Minot 115 kV

Option B observed similar flagged voltage violation results as Option A. Upon closer inspection, Option B has a slightly lower performance than Option A. For example, Ruthville substation has an observed voltage of .88 p.u. for the loss of Mallard – Ruthville 115 kV line. The same contingency applied to Option A observed voltages of .91 p.u at Ruthville substation.

The following table shows the category B thermal violations observed for Option B. The results are very similar to Option A. Like Option A, two of the lines flagged for overloads are new proposed lines. These lines were given a rating of 100 MVA to determine the minimum rating for the conductor needed. The Mallard – Ward County 115 kV line in this case will need at least a 135+ MVA rating. The Mouse River – Ruthville 115 kV line will need at least a 104+ MVA rated line. Compared to Option A, Option B requires a

slightly higher minimum rating for both of these lines. The Mallard – Logan 115 kV line overloads with the loss of the proposed Logan – Ward County 230 kV line. Again, the overload of the Logan – Mallard 115 kV line was found to be invalid due to an incorrect winter rating in the model. Similar to option A, the remaining issues with the McHenry transformer can be addressed as explained in Option A.

Minot Area Category B Flagged Thermal Issues Option B

2024 Winter Peak Model with North Transfers

Circuit Element	MVA Rating	Loading Percent	Contingency
Ward County to Mallard 115 kV	100.0	46	System Intact
		135.1	Loss of Mallard to Logan 115 kV
		112.2	Loss of Logan 230/115 kV Transformer
Mallard to Logan 115 kV	182.0	59.4	System Intact
		104.3	Loss of Logan to Ward County 230 kV
Mouse River to Ruthville 115 kV	100.0	18.1	System Intact
		104.4	Loss of Mallard to Ruthville 115 kV
McHenry 230/115 kV Transformer	84.0	89.3	System Intact
		106.4	Loss of McHenry to Balta 230 kV
		129.3	Loss of Balta to Rugby 230 kV
		109	Loss of Rugby 230/115 kV Transformer
		112.2	Loss of Garrison to Voltaire 115 kV

A full system intact and contingency comparison of the base case, option A, and option B is included in Appendix C. Appendix C also contains the results for the monitored area as well as the Minot area. The condensed tables below show the performance of the base case and both options.

Minot Area Category B Flagged Voltage Issues Comparison

UNDERVOLTAGE	Base Model		Option A		Option B		
Substation	Voltage	Voltage Drop	Voltage	Voltage Drop	Voltage	Voltage Drop	Contingency
Souris 115 kV	94.58						System Intact
	86.44	8.13					Loss of Souris to Mallard 115 kV
	80.66	13.91					Loss of Mallard to Logan 115 kV
	87.99	6.58					Loss of McHenry 230/115 kV Transformer
	89.07	5.51					Loss of Leland Olds to Logan 230 kV
	86.2	8.38					Loss of Logan 230/115 kV Transformer
	89.07	5.51					Loss of Souris – Velva – McHenry 115 kV
Mallard 115 kV	94.86						System Intact
	80.18	14.68					Loss of Mallard to Logan 115 kV
	89.54	5.32					Loss of McHenry 230/115 kV Transformer
	90.83	4.03					Loss of Balta to Rugby 230 kV
	90.66	4.2					Loss of Rugby 230/115 kV Transformer

	89.09	5.77					Loss of Leland Olds to Logan 230 kV
	86.06	8.8					Loss of Logan 230/115 kV Transformer
	90.69	4.17					Loss of Souris – Velva – McHenry 115 kV
Velva Tap 115 kV	98.88						System Intact
	94.15	4.73					Loss of Souris to Mallard 115 kV
	90.79	8.1					Loss of Mallard to Logan 115 kV
	88.38	10.51					Loss of McHenry 230/115 kV Transformer
	94	4.88					Loss of Logan 230/115 kV Transformer
Logan 230 kV	96.66						System Intact
	94.48	2.18					Loss of Mallard to Nelson 115 kV
	93.95	2.72					Loss of McHenry 230/115 kV Transformer
	94.54	2.12					Loss of Balta to Rugby 230 kV
	94.54	2.13					Loss of Rugby 230/115 kV Transformer
	94.51	2.16					Loss of Nelson to Max 115 kV
	91.15	5.51					Loss of Leland Olds to Logan 230 kV
	94.47	2.19					Loss of Souris – Velva – McHenry 115 kV
Logan 115 kV	96.23						System Intact
	93.53	2.7					Loss of Mallard to Nelson 115 kV
	92.11	4.12					Loss of McHenry 230/115 kV Transformer
	93.07	3.16					Loss of Balta to Rugby 230 kV
	92.99	3.24					Loss of Rugby 230/115 kV Transformer
	90.52	5.7					Loss of Leland Olds to Logan 230 kV
	87.08	9.15					Loss of Logan 230/115 kV Transformer
	92.97	3.26					Loss of Souris – Velva – McHenry 115 kV
Ruthville 115 kV	92.54		96.79		96.71		System Intact
	76.6	15.94					Loss of Mallard to Logan 115 kV
	86.84	5.7					Loss of McHenry 230/115 kV Transformer
	88.22	4.32	94.48	2.3	94.4	2.31	Loss of Balta to Rugby 230 kV
	88.04	4.5	94.84	1.95	94.76	1.95	Loss of Rugby 230/115 kV Transformer
	86.35	6.19	94.26	2.53	94.21	2.5	Loss of Leland Olds to Logan 230 kV
	N/A	N/A	94.65	2.13	88.87	7.83	Loss of Souris to Mouse River 115 kV
	N/A	N/A	91.43	5.36	94.65	2.05	Loss of Mallard to Ruthville 115 kV
	83.07	9.48					Loss of Logan 230/115 kV Transformer
	88.07	4.47					Loss of Souris – Velva – McHenry 115 kV
SW Minot 115 kV	95.33		97.56		97.56		SYSTEM INTACT
	91.4	3.92					Loss of McHenry 230/115 kV Transformer
	92.35	2.97					Loss of Balta to Rugby 230 kV
	92.26	3.07					Loss of Rugby 230/115 kV Transformer
	89.69	5.64					Loss of Leland Olds to Logan 230 kV
	87	8.33					Loss of Logan 230/115 kV Transformer
	85.81	9.52	97.56	10.63	86.93	10.63	Loss of Logan to SW Minot 115 kV
	92.25	3.07					Loss of Souris – Velva – McHenry 115 kV

Minot Area Category B Flagged Thermal Issues Comparison

Circuit Element	MVA Rating	Base Model Loading Percent	Option A Loading Percent	Option B Loading Percent	Contingency
Mallard to Logan 115 kV	159.3	81.5			System Intact
		100.7			Loss of Souris to Velva Tap 115 kV

		117.7			Loss of Mallard to Nelson 115 kV
		100.5			Loss of Velva Tap to McHenry 115 kV
		103.3			Loss of McHenry to Coal Creek Tap 230 kV
		100			Loss of McHenry 230/115 kV Transformer
		100.3			Loss of Balta to Rugby 230 kV
		117.7			Loss of Nelson to Max 115 kV
		119.5			Loss of Garrison to Max 115 kV
		100.7			Loss of Souris – Velva – McHenry 115 kV
McHenry to Velva Tap 115 kV	119.5	41.1			System Intact
		102.3			Loss of Souris to Mallard 115 kV
		101.4			Loss of Mallard to Logan 115 kV
McHenry 230/115 kV Transformer	84.0	114.6	89.5	89.3	System Intact
		160.4			Loss of Souris to Mallard 115 kV
		178.7			Loss of Mallard to Logan 115 kV
		159.3	106.5	106.4	Loss of McHenry to Balta 230 kV
		188.2	129.5	129.3	Loss of Balta to Rugby 230 kV
		154.7	109.3	109	Loss of Rugby 230/115 kV Transformer
		145.4	112.4	112.2	Loss of Garrison to Voltaire 115 kV
		157.8			Loss of Leland Olds to Logan 230 kV
		165			Loss of Logan 230/115 kV Transformer
Garrison to Voltaire 115 kV	109.0	77.2			System Intact
		102.3			Loss of McHenry to Coal Creek Tap 230 kV
Logan 230/115 kV Transformer	200.0	101.4			System Intact
		113			Loss of Souris to Velva Tap 115 kV
		124.6			Loss of Mallard to Nelson 115 kV
		112.9			Loss of Velva Tap to McHenry 115 kV
		116.2			Loss of McHenry to Coal Creek 230 kV
		112.9			Loss of Balta to Rugby 230 kV
		124.6			Loss of Nelson to Max 115 kV
		125.8			Loss of Garrison to Max 115 kV
		115.9			Loss of Logan to Blaisdell 230 kV
		113			Loss of Souris – Velva – McHenry 115 kV

5.3.3: Prior Outage Analysis

Prior outage analysis was also performed on the 2024 winter peak north transfer model. The results for the entire monitored area are included in appendix C. Both options address most prior outage issues that were observed in the base case.

An item of concern flagged by the prior outage analysis is the loss of the second Ward County – Souris 115 kV line with a prior outage of the other Ward County – Souris 115 kV line. This Category C contingency results in low voltages at the Souris, Mouse River, and Ruthville 115 kV buses. There are a couple of options if the need arises to address this concern. One option is to re-conductor the existing Mallard – Ruthville 115 kV line to a larger conductor for an increased rating as well as improved impedance performance. Another option would be to bring another source into Mouse River substation from the South. Potential sources from the south include a 115 kV line from

SW Minot substation, Logan, or Ward County to Mouse River. This allows power to flow from the north and south into Mouse River to serve Souris in the event of Category C3 outages for the loss of both Ward County – Souris 115 kV lines. For this study, the near term recommendation would be to have 60 Mvars of capacitor banks at Souris substation to maintain .92 p.u. voltage at Souris and Mouse River for this prior outage event.

5.4: Dynamic Stability.

Not applicable for this load serving study

5.5: Constrained Interface Analysis.

Not applicable for this load serving study

5.6: Reactive Power Requirements.

A QV analysis was performed to determine the reactive needs to bring the voltages up to 1 p.u. for system intact conditions. The first bus chosen was Souris due to the fact this bus serves the most load in the Minot area.

Souris QV Chart

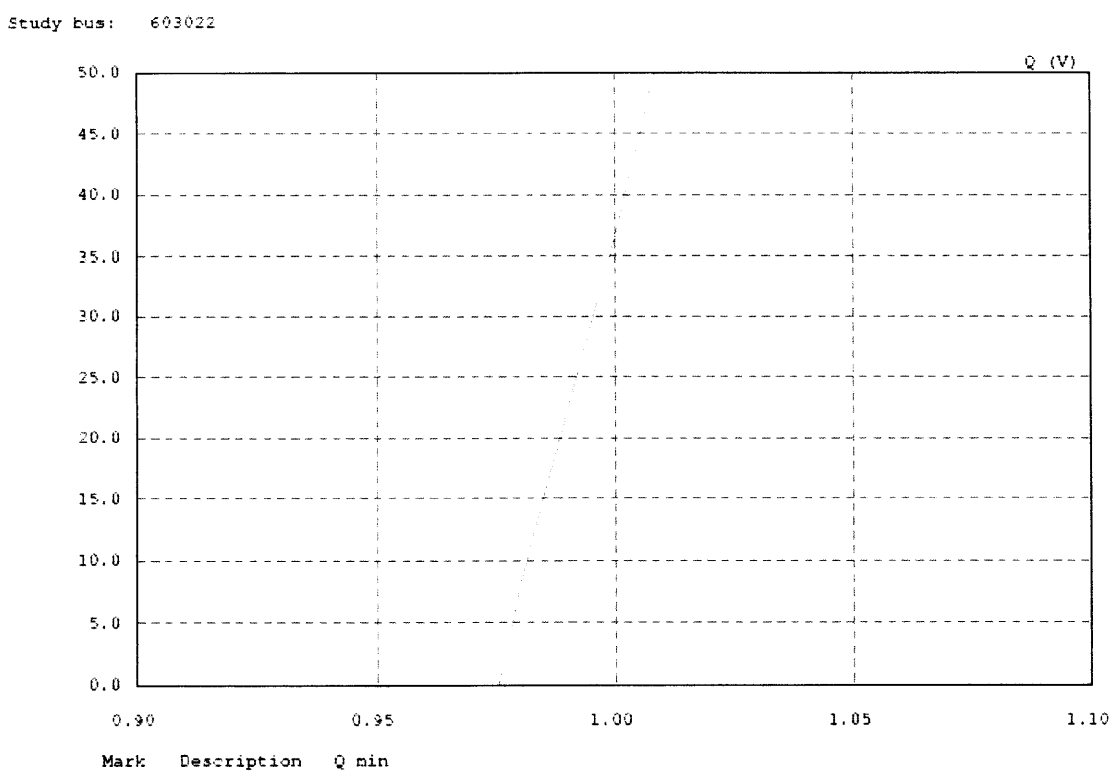

The QV analysis indicates that Souris would need an increment of about 35 Mvars to bring the system intact voltage to unity. The capacitor banks at Souris were increased

from two steps of 15 Mvar to two steps of 30 Mvar. With the addition capacitor capability at Souris, Ruthville's voltage was still below unity. A QV analysis was performed at the Ruthville bus to determine the reactive needs to bring its bus voltage to unity.

Ruthville QV Chart

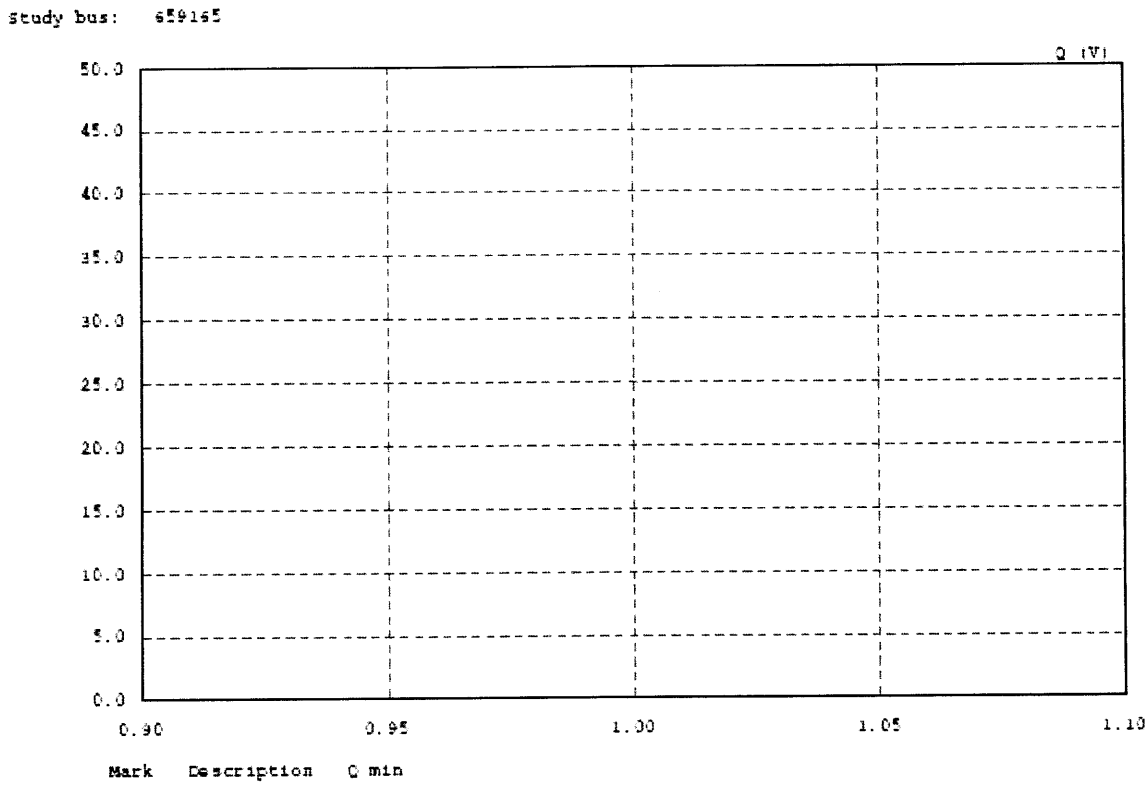

The QV indicates the need for approximately 20 to 25 MVars of capacitor banks. A capacitor bank was added to Ruthville's bus consisting of two steps of 10 Mvar capacitor banks. Upon re-solving the model, most of the Minot area loads serving buses are near unity voltage for system intact conditions.

Minot Area Load Serving Bus Voltages Option A

With Additional Capacitor Banks

Substation	System Intact Voltage
603022 SOURIS 7	1.014
603023 MALLARD7	1.009

659165 RUTHVILLECP7	1.005
659307 SWMINOT CP7	0.996
603268 MOUSE RIV (New)	1.010

Minot Area Load Serving Bus Voltages Option B

With Additional Capacitor Banks

Substation	System Intact Voltage
603022 SOURIS 7	1.018
603023 MALLARD7	1.009
659165 RUTHVILLECP7	1.003
659307 SWMINOT CP7	0.996
603268 MOUSE RIV (New)	1.004

5.7: Losses: Technical Evaluation.

Since the Minot area proposed solution adds 230 kV lines to the area, an analysis was conducted for possible system loss savings. The 2024 winter peak model without north transfers was used for this analysis. This is a conservative model for losses since transfer models tend to have higher losses. Option A results in a system loss reduction of 5.4 MW and option B results in a system loss reduction of 5.2 MW. The primary reason option B doesn't perform as well as option A in loss reduction is due to the 115 kV lines serving Souris. These lines are not intended to be rebuilt to a lower impedance conductor as part of option B. The bulk of the loss savings is due to the offloading power flows from 115 kV system onto the new 230 kV system which reduces the losses. The 230 kV voltage requires less current to transmit an equivalent amount of power reducing I^2R losses.

5.8: Losses: Economic Evaluation.

With option A saving 5.4 MWs and option B saving 5.2 MWs, a net present values of energy savings was calculated. The following assumptions were used.

- Cost of energy $30/MWHr
- Assumed loss savings period of 20 years
- Assumed present worth factor of 9.59 (based on an 8.32% interest rate)
- Assumed loss factor of .3
- Yearly energy savings = MW loss reduction * 8760 * Energy Cost * Loss Factor
- Net Present Value = Yearly energy savings * Present Worth Factor

	Loss Saving (MW)	Yearly Loss Savings	Net Present Value
Base Model	0	$0	$0
Option A	5.4	$425,736	$4,082,808
Option B	5.2	$409,968	$3,931,593

5.9: Circuit Breaker Stress Analysis.

Not applicable for this load serving study

6.0: Economic Analysis.

Not applicable for this load serving study

6.1: Installed Cost (including base reactive power facilities).

The estimates provided for the facilities below are indicative level estimates.

Option A

Element	Cost
Ward County Substation	$28 million
Ward County – McHenry 230 kV	$15 million
Ward County – Souris #1 115 kV	$4 million
Ward County – Souris #2 115 kV	$4 million
Logan 230 kV bus expansion	$10.7 million
McHenry 230 kV bus expansion	$3.5 million
Logan 115 kV bus expansion	$6.1 million
Mouse River Substation	$4 million
Souris – Mouse River 115 kV line	$4 million
Mouse River – Ruthville	$3.9 million
Ruthville Substation expansion	$3.5 million
Total	$88.2 million

Option B

Element	Cost
Ward County Substation	$28 million
Ward County – McHenry 230 kV line	$15 million
Logan 230 kV bus expansion	$10.7 million
McHenry 230 kV bus expansion	$3.5 million
Logan 115 kV bus expansion	$6.1 million
Mouse River Substation	$4 million
Mouse River – Ward County 115 kV line	$8 million
Mouse River – Ruthville	$3.9 million
Ruthville Substation expansion	$3.5 million
Total	$84.2 million

6.2: Evaluated Cost (with losses).

7.0: Relevant Concerns.

With continued load growth in the Bakken area in western North Dakota, the 230 kV system running north out of the coal fields will come under more strain. The Leland Olds – Logan and Coal Creek Tap – McHenry 230 kV lines may show potential overloads in the future for loss of the other line. The currently proposed plan does allow accommodation for additional bulk sources to be brought into the Minot area should future studies determine the need. A potential future project, in this case, would be to extend the propose Basin Electric 345 kV line from Tioga to Ward County. This proposed project works with any future transmission expansion projects in the Minot area.

7.1: Load-Serving Issues.

This project addresses most of the near term and long term issues associate with the 115 kV lines in the Minot area. If future studies show more 115 kV needs, this project is well positioned to accommodate upgrades to address any future load serving transmission needs for the Minot area.

7.2: Constructability & Schedule Considerations.

The Minot area transmission is a fairly weak system. Outage windows are going to be very narrow. Outages are ideally available during the months of April and October when the loads are historically observed to be at their minimum. Since Ward County and the new Ward County – McHenry 230 kV line are new assets, the majority of their construction can occur without the need of outages in this area. In order to interconnect the Ward County – McHenry 230 kV line into McHenry substation, an outage of the 230 kV bus is required for approximately 1 month. Since this outage also removes the McHenry transformer out of service, this is an ideal time to loop in the McHenry – Velva – Souris 115 kV line into the Ward County substation. Given this information, the proposed in service date for Ward County substation and the Ward County – McHenry 230 kV, McHenry – Ward County 115 kV, and Ward County – Souris 115 kV line would be May 1, 2018.

Once this step is completed, the next phase of construction is to loop in the Mallard – Logan 115 kV line into Ward County and convert the Logan – Ward County line to 230 kV. Expanding the 230 kV bus at Logan requires XX outage for the duration of YY. The proposed in service date for the Logan – Ward County 230 kV and Ward County – Mallard 115 kV line is DD.

With both 230 kV lines in service, the next construction phase would be the rebuild of the 115 kV lines from Ward County to Souris. Only 1 line can be out of service at a time as the target completion of this construction would be October 1, 2018.

The final construction phase would be the line from Souris to Mouse River to Ruthville. The required in service date of these facilities will be determined by NSP distribution's request for interconnection of the Mouse River substation as well as Central Power's need for additional 115 kV sources into Ruthville substation. Mouse River would be a 115/13.8 kV distribution substation to serve load on the western side of the city of Minot. The targeted in service date is assumed to be June 1, 2020.

7.3: Double-Circuit Line Considerations.

A double circuit configuration was considered for the new Ward County – McHenry 230 kV line with the existing McHenry- Velva – Souris 115 kV line. This is not desirable due to the inability to take the existing McHenry – Velva – Souris 115 kV line out of service for an extended period of time in order to construct a double circuit line.

7.4: Joint Ownership Considerations.

The proposed Ward County substation recommended in this report would interconnect facilities owned by Northern States Power and Basin Electric Power Cooperative. This can result in a couple of different ownership configurations for Ward County. These configurations are as follows:

Configuration 1 – Sole Ownership

- The Ward County substation is owned by a single entity.
    - Pros – simple, lower cost
    - Cons – could results in one company or the other stranding a 230 kV asset.

Configuration 2 – Jointly Owned

- The Ward County would be a jointly owned substation in which both companies would own certain substation assets such as transformers etc
    - Pros – lower cost, smaller footprint
    - Cons – Difficult ownership structure, compliance and reporting coordination

Configuration 3 – Discrete facilities

- Ward County would be broken up into two discretely owned substations side by side.
    - Pros – Keeps facilities independent of one another, simple for NERC reporting and security, maintenance
    - Cons – Larger footprint, more expensive

The goal of this study is to analyze the technical viability of the transmission options. The ownership of the proposed substation at Ward County or other jointly planned facilities will be decided at a later time.

8.0: Detailed Listing of Recommended and System Alternative Plans' Facilities.

This study shows the need for new bulk and distribution facilities in the Minot area to serve the existing and future load growth in the region. The recommendation from this report is a combination of bulk option 1 and distribution option A. These facilities include a new 230 kV line from McHenry to Ward County – Logan and a new 115 kV loop from Souris – Mouse River – Ruthville. In addition to new facilities, this report identified additional impacted facilities which will need to be upgraded. The new and existing facilities fall under several entities responsibility and is identified below.

Facility	Responsible Entity
Ward County Substation	Joint NSP/BEPC

Ward County – McHenry 230 kV	NSP
Logan – Ward County 230 kV	BEPC
Nelson – Logan 115 kV	WAPA
Ward County – Souris #1 115 kV	NSP
Ward County – Souris #2 115 kV	NSP
Logan 230 kV bus expansion	BEPC
McHenry 230 kV bus expansion	GRE
Logan 115 kV bus expansion	BEPC
Mouse River Substation	NSP
Souris – Mouse River 115 kV line	NSP
Mouse River – Ruthville	Central Power

Appendix A: Maps (Base Plan & System Alternative)

Bulk Transmission Option Maps

Option 1

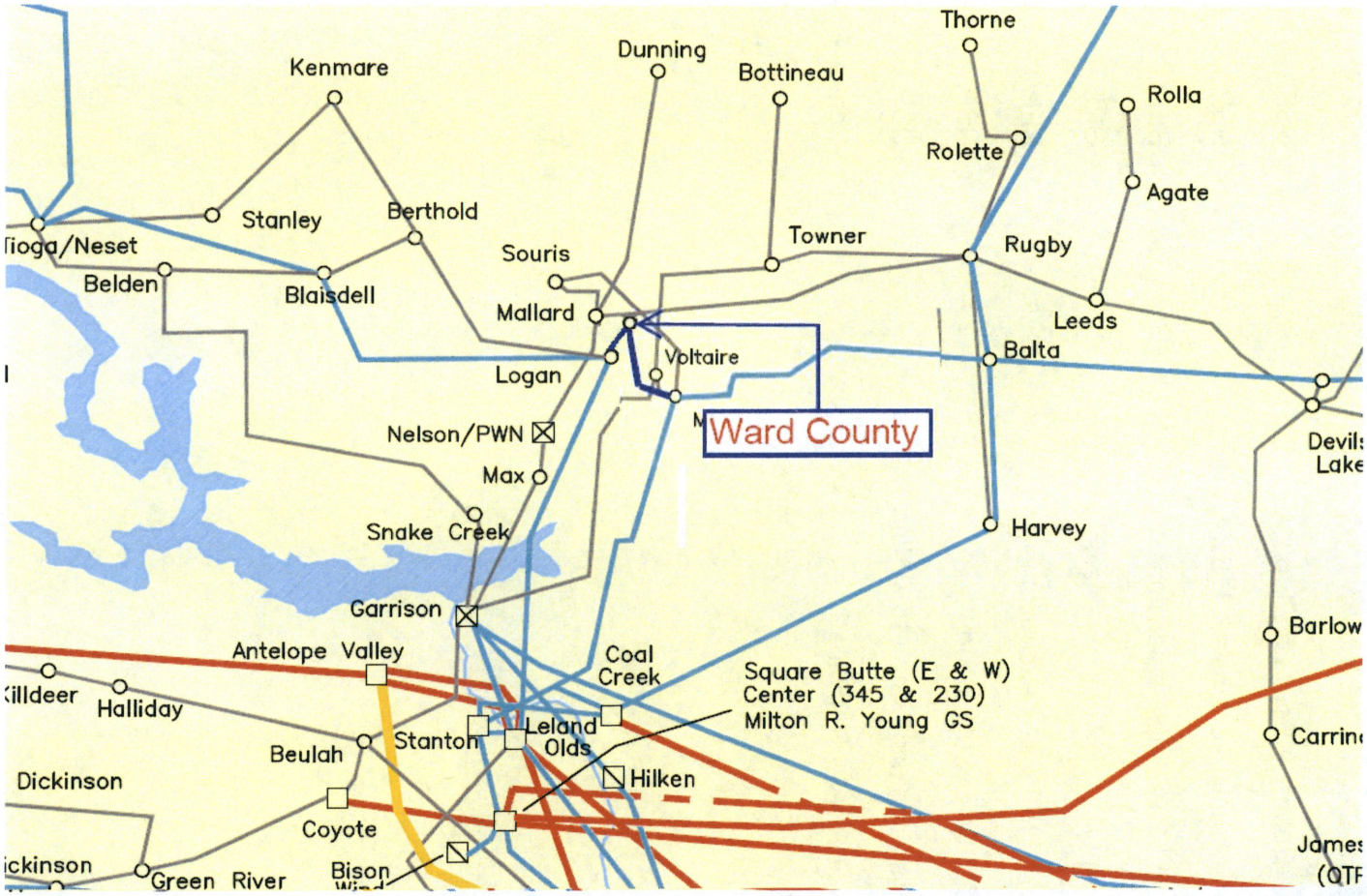

Option 2

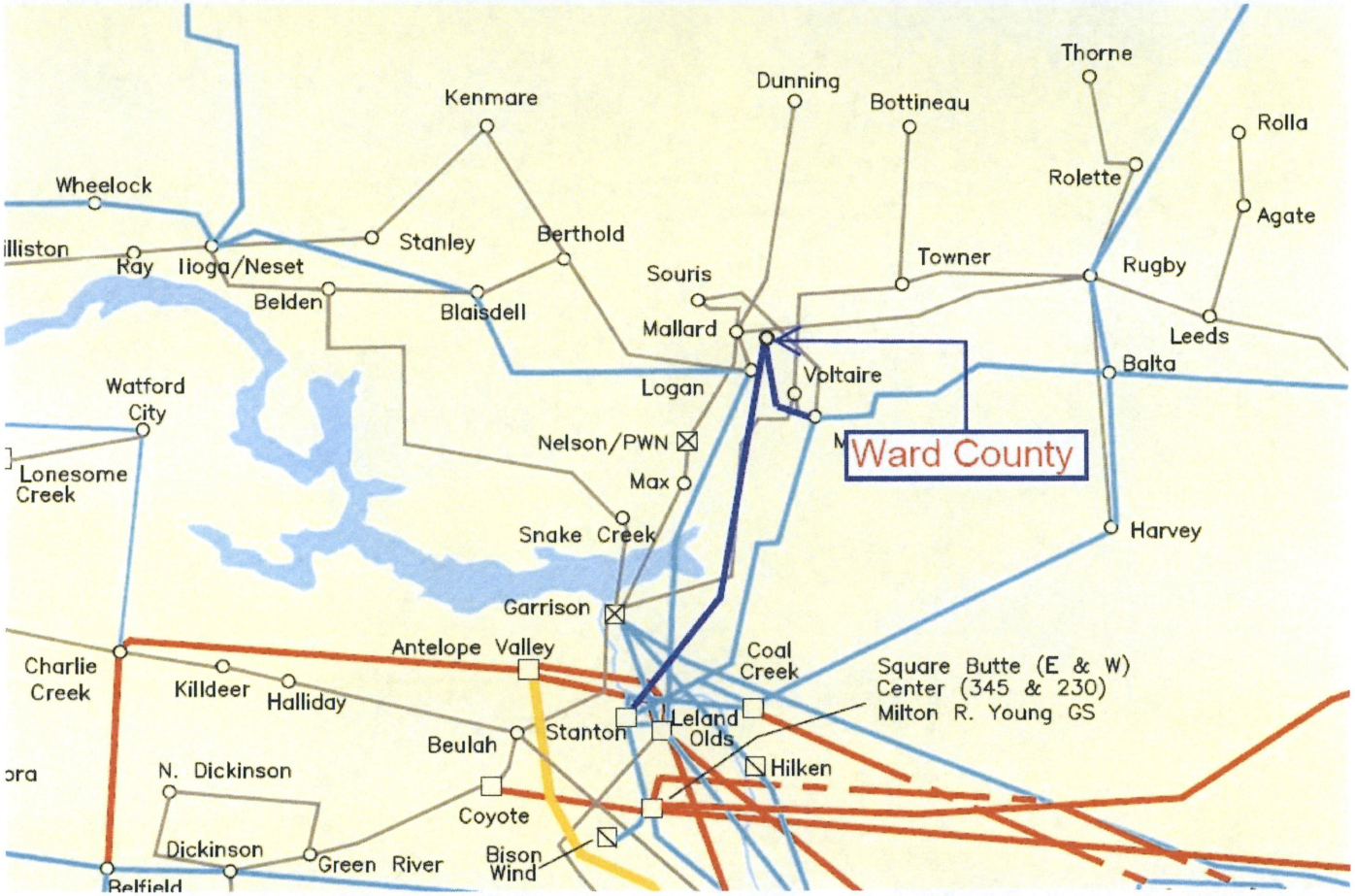
Thorne
Dunning
Kenmare
Bottineau
Rolla
Rolette
Wheelock
Agate
Stanley
Berthold
illiston
Ray
Ioga/Neset
Towner
Rugby
Souris
Belden
Blaisdell
Mallard
Leeds
Balta
Voltaire
Watford City
Logan
Ward County
Nelson/PWN
Lonesome Creek
Max
Snake Creek
Harvey
Garrison
Antelope Valley
Coal Creek
Charlie Creek
Killdeer
Halliday
Square Butte (E & W)
Center (345 & 230)
Milton R. Young GS
Leland Olds
Stanton
Beulah
Hilken
N. Dickinson
Coyote
Dickinson
Green River
Bison Wind
Belfield

Option 3

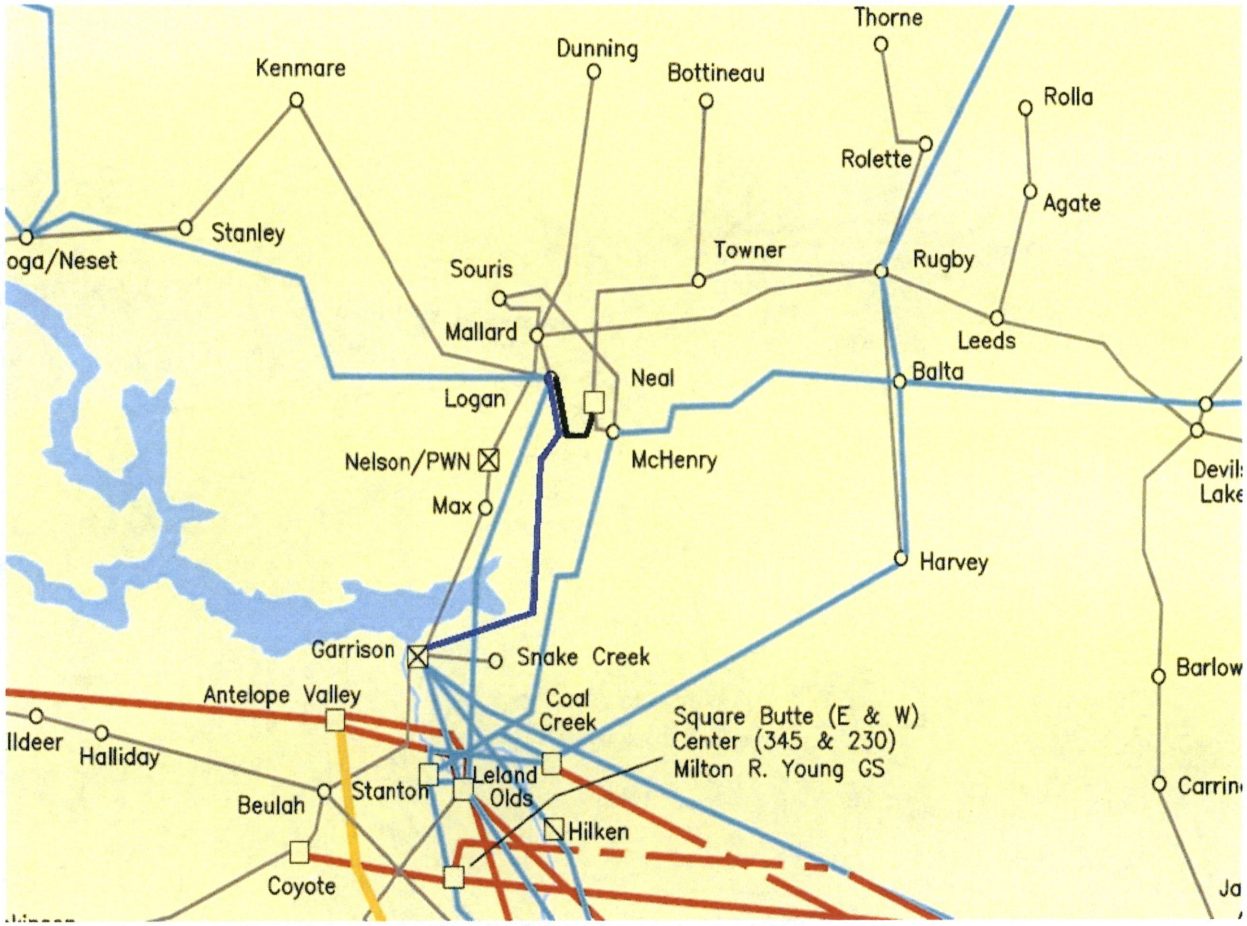
Thorne
Dunning
Kenmare
Bottineau
Rolla
Rolette
Agate
Stanley
oga/Neset
Towner
Rugby
Souris
Mallard
Leeds
Neal
Balta
Logan
Nelson/PWN
McHenry
Max
Harvey
Garrison
Snake Creek
Antelope Valley
Coal
Creek
Square Butte (E & W)
Center (345 & 230)
Milton R. Young GS
ldeer
Halliday
Leland
Olds
Stanton
Beulah
Hilken
Coyote
Barlow
Carrin
Ja

Base Existing System Map

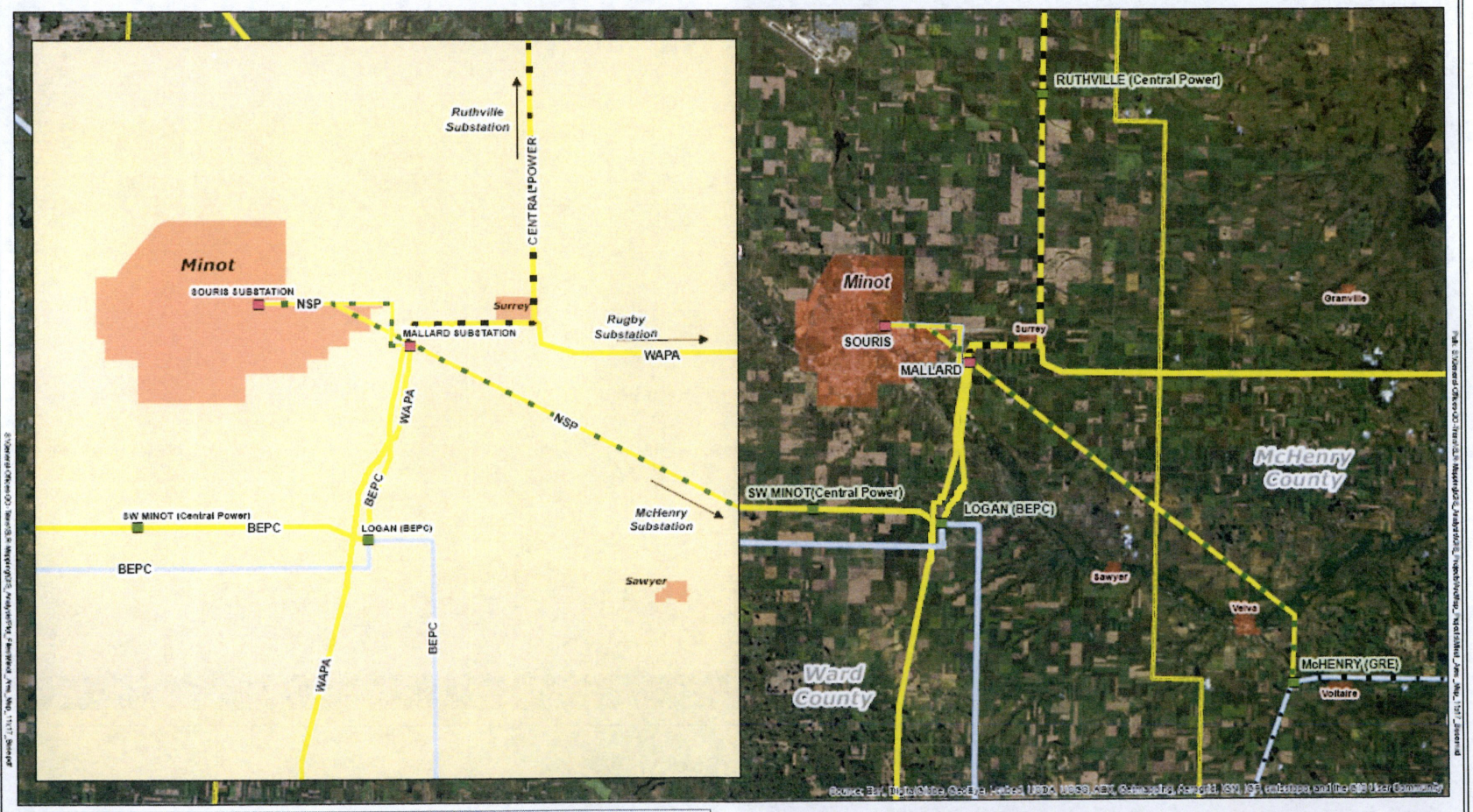

LEGEND

- Great River Energy (230 Kv)
- BEPC (230 Kv)
- WAPA or BEPC (115 Kv)
- Central Power (115 Kv)
- NSP (115 Kv)
- Foreign Owned Substation
- Xcel Owned Substation
- County Boundary
- City or Town Limits

Base Map -- Minot, ND Area

Data Sources: Xcel Energy and Ventyx.

0 2.5 5 10 Miles

N

Xcel Energy
RESPONSIBLE BY NATURE

DISCLAIMER: This information is believed to be correct but is subject to change and is not warranteed.

March, 2014

Proposed Option A

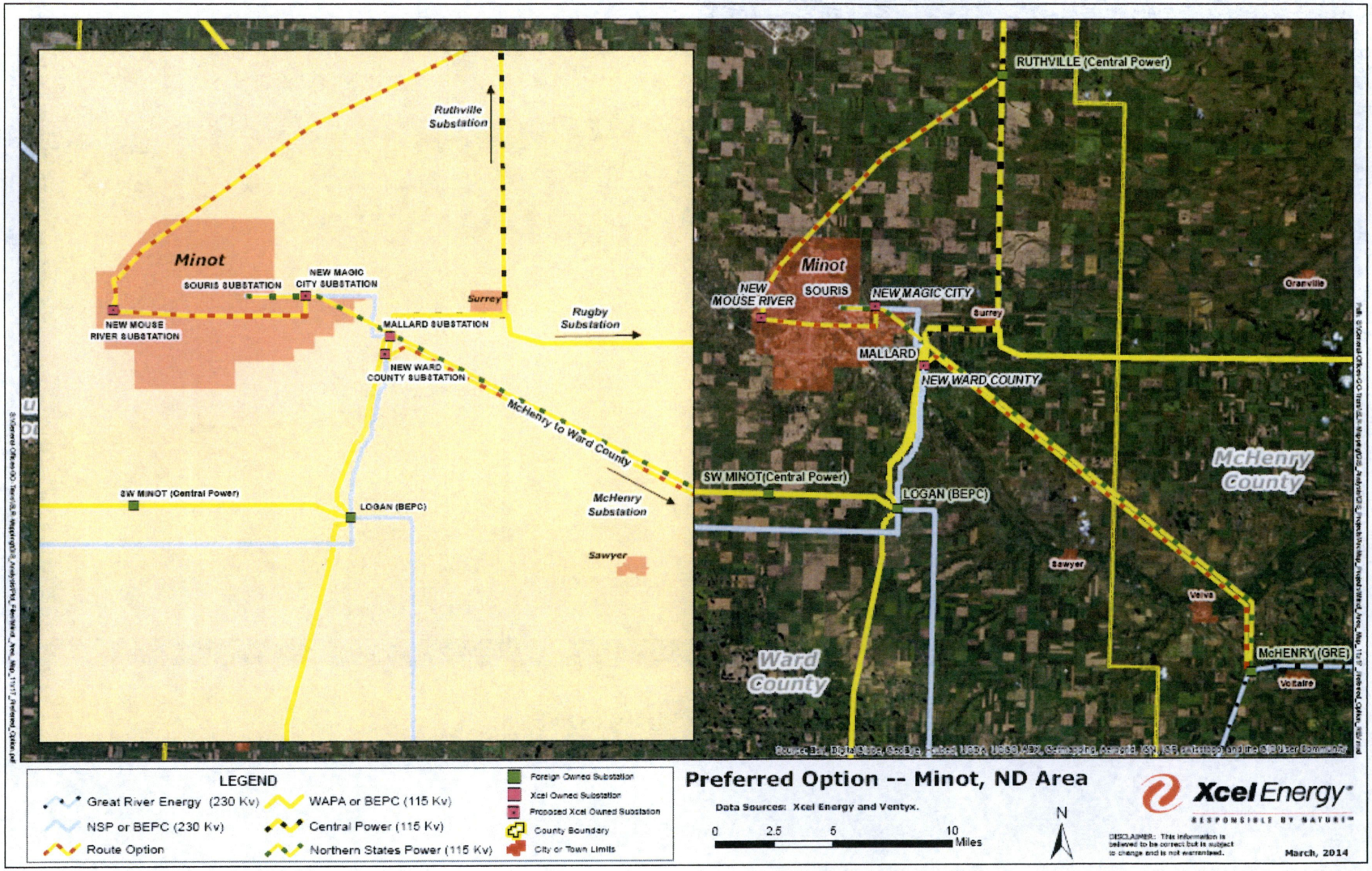

Proposed Option B

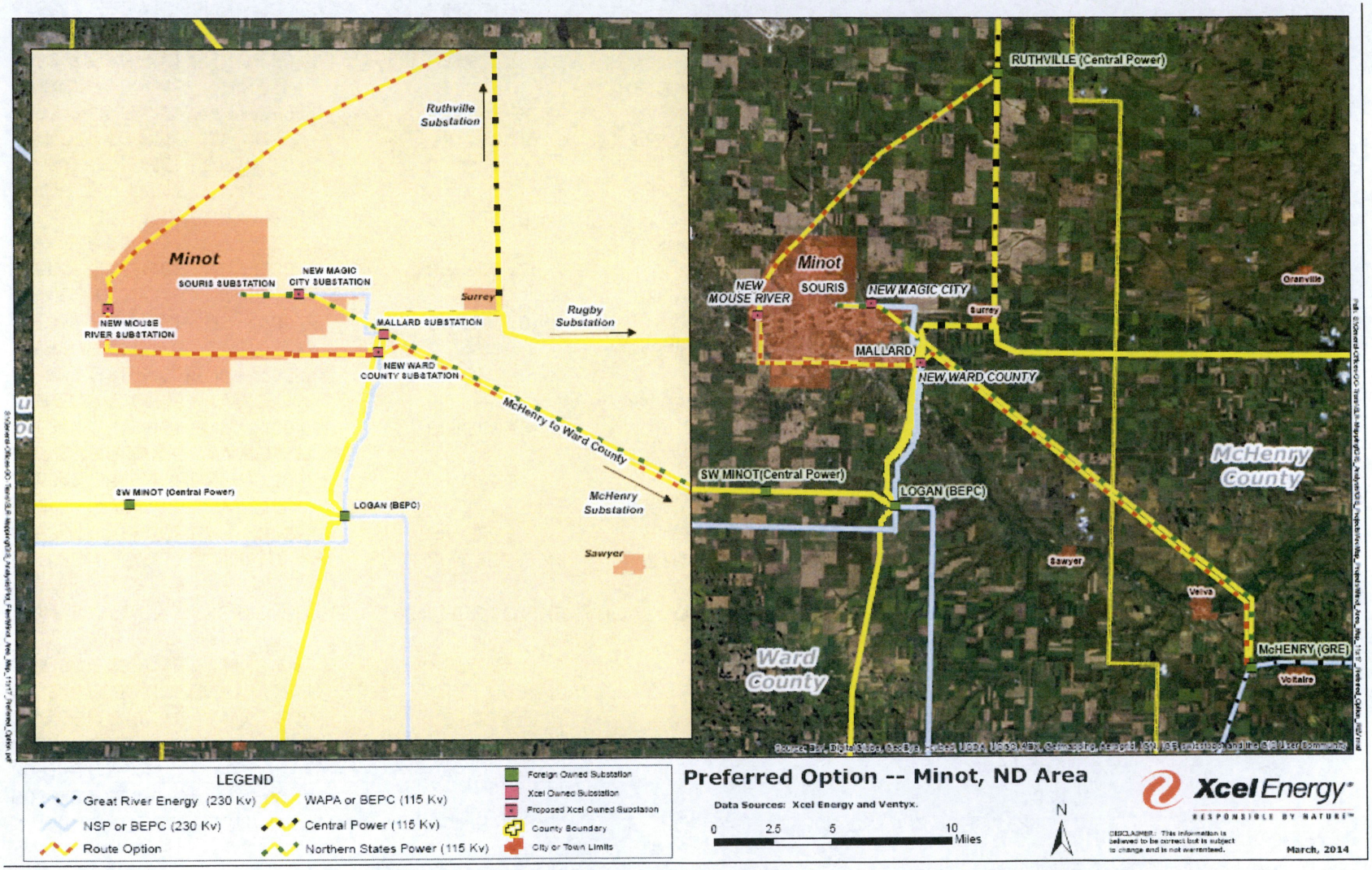

Appendix B: Initial Comparison of Bulk Transmission Options (ACCC).

BASE CASE MONITORED BRANCHES LOADED ABOVE 100.0% OF RATING SET A - ALL VIOLATIONS

X--- MONITORED ELEMENT ----X	Bulk Base Case	Bulk Option 1	Bulk Option 2	Bulk Option 3
603023 MALLARD7 115.00				106.50%
659155 LOGAN 7 115.00 1				166MVA
615347 GRE-MCHENRY4230.00	113.80%			102.30%
3WNDTR 230/115 WND 2 1	96MVA			86MVA
615348 GRE-MCHENRY7115.00	104.10%			
3WNDTR 230/115 WND 1 1	87MVA			

CONTINGENCY CASE MONITORED BRANCHES LOADED ABOVE 100.0% OF RATING SET A - ALL VIOLATIONS

X--- MONITORED ELEMENT ----X	X---LABEL--X	Bulk Base Case	Bulk Option 1	Bulk Option 2	Bulk Option 3
615347 GRE-MCHENRY4230.00	SINGL1 1	157.10%			133.20%
3WNDTR 230/115 WND 2 1		132MVA			112MVA
615347 GRE-MCHENRY4230.00	SINGL1 3	127.40%			115.30%
3WNDTR 230/115 WND 2 1		107MVA			97MVA
615347 GRE-MCHENRY4230.00	SINGL1 4	112.40%			
3WNDTR 230/115 WND 2 1		94MVA			
615347 GRE-MCHENRY4230.00	SINGL1 5	173.90%			128.90%
3WNDTR 230/115 WND 2 1		146MVA			108MVA
615347 GRE-MCHENRY4230.00	SINGL1 10	109.90%			
3WNDTR 230/115 WND 2 1		92MVA			
615347 GRE-MCHENRY4230.00	SINGL1 12	155.30%	104.30%		148.20%
3WNDTR 230/115 WND 2 1		130MVA	88MVA		124MVA
615347 GRE-MCHENRY4230.00	SINGL1 15	111.80%			100.60%
3WNDTR 230/115 WND 2 1		94MVA			85MVA
615347 GRE-MCHENRY4230.00	SINGL1 16	111.10%			
3WNDTR 230/115 WND 2 1		93MVA			
615347 GRE-MCHENRY4230.00	SINGL1 17	108.20%			
3WNDTR 230/115 WND 2 1		91MVA			
615347 GRE-MCHENRY4230.00	SINGL1 18	113.80%			102.30%
3WNDTR 230/115 WND 2 1		96MVA			86MVA
615347 GRE-MCHENRY4230.00	SINGL1 19	109.10%			
3WNDTR 230/115 WND 2 1		92MVA			

615347 GRE-MCHENRY4230.00	SINGL1 20	108.10%			
3WNDTR 230/115 WND 2 1		91MVA			
615347 GRE-MCHENRY4230.00	SINGL1 22	185.40%	130.30%	124.00%	171.20%
3WNDTR 230/115 WND 2 1		156MVA	109MVA	104MVA	144MVA
615347 GRE-MCHENRY4230.00	SINGL1 23	153.80%	107.60%	102.90%	131.80%
3WNDTR 230/115 WND 2 1		129MVA	90MVA	86MVA	111MVA
615347 GRE-MCHENRY4230.00	SINGL1 24	112.50%			101.20%
3WNDTR 230/115 WND 2 1		95MVA			85MVA
615347 GRE-MCHENRY4230.00	SINGL1 25	112.80%			101.40%
3WNDTR 230/115 WND 2 1		95MVA			85MVA
615347 GRE-MCHENRY4230.00	SINGL1 26	114.10%			102.70%
3WNDTR 230/115 WND 2 1		96MVA			86MVA
615347 GRE-MCHENRY4230.00	SINGL1 27	113.90%			102.30%
3WNDTR 230/115 WND 2 1		96MVA			86MVA
615347 GRE-MCHENRY4230.00	SINGL1 28	113.80%			102.20%
3WNDTR 230/115 WND 2 1		96MVA			86MVA
615347 GRE-MCHENRY4230.00	SINGL1 29	113.80%			102.20%
3WNDTR 230/115 WND 2 1		96MVA			86MVA
615347 GRE-MCHENRY4230.00	SINGL1 30	121.50%			104.40%
3WNDTR 230/115 WND 2 1		102MVA			88MVA
615347 GRE-MCHENRY4230.00	SINGL1 31	109.40%			
3WNDTR 230/115 WND 2 1		92MVA			
615347 GRE-MCHENRY4230.00	SINGL1 33	114.60%			103.30%
3WNDTR 230/115 WND 2 1		96MVA			87MVA
615347 GRE-MCHENRY4230.00	SINGL1 34	113.70%			102.20%
3WNDTR 230/115 WND 2 1		96MVA			86MVA
615347 GRE-MCHENRY4230.00	SINGL1 35	114.30%			102.90%
3WNDTR 230/115 WND 2 1		96MVA			86MVA
615347 GRE-MCHENRY4230.00	SINGL1 36	113.80%			102.20%
3WNDTR 230/115 WND 2 1		96MVA			86MVA
615347 GRE-MCHENRY4230.00	SINGL1 37	112.80%			101.50%
3WNDTR 230/115 WND 2 1		95MVA			85MVA
615347 GRE-MCHENRY4230.00	SINGL1 38	113.80%			102.30%
3WNDTR 230/115 WND 2 1		96MVA			86MVA
615347 GRE-MCHENRY4230.00	SINGL1 39	113.90%			102.30%
3WNDTR 230/115 WND 2 1		96MVA			86MVA

615347 GRE-MCHENRY4230.00	SINGL1 40	113.80%			102.20%
3WNDTR 230/115 WND 2 1		96MVA			86MVA
615347 GRE-MCHENRY4230.00	SINGL1 41	113.90%			102.30%
3WNDTR 230/115 WND 2 1		96MVA			86MVA
615347 GRE-MCHENRY4230.00	SINGL1 42	113.90%			102.30%
3WNDTR 230/115 WND 2 1		96MVA			86MVA
615347 GRE-MCHENRY4230.00	SINGL1 43	127.30%			115.20%
3WNDTR 230/115 WND 2 1		107MVA			97MVA
615347 GRE-MCHENRY4230.00	SINGL1 44	113.80%			102.30%
3WNDTR 230/115 WND 2 1		96MVA			86MVA
615347 GRE-MCHENRY4230.00	SINGL1 45	122.70%			101.40%
3WNDTR 230/115 WND 2 1		103MVA			85MVA
615347 GRE-MCHENRY4230.00	SINGL1 46	115.20%			104.70%
3WNDTR 230/115 WND 2 1		97MVA			88MVA
615347 GRE-MCHENRY4230.00	SINGL1 47	115.20%			104.70%
3WNDTR 230/115 WND 2 1		97MVA			88MVA
615347 GRE-MCHENRY4230.00	SINGL1 48	115.20%			104.70%
3WNDTR 230/115 WND 2 1		97MVA			88MVA
615347 GRE-MCHENRY4230.00	SINGL1 49	114.40%			104.50%
3WNDTR 230/115 WND 2 1		96MVA			88MVA
615347 GRE-MCHENRY4230.00	SINGL1 50	131.60%			117.40%
3WNDTR 230/115 WND 2 1		111MVA			99MVA
615347 GRE-MCHENRY4230.00	SINGL1 51	121.30%			106.60%
3WNDTR 230/115 WND 2 1		102MVA			90MVA
615347 GRE-MCHENRY4230.00	SINGL1 52	121.30%			106.60%
3WNDTR 230/115 WND 2 1		102MVA			90MVA
615347 GRE-MCHENRY4230.00	SINGL1 53	144.40%	111.50%	104.90%	
3WNDTR 230/115 WND 2 1		121MVA	94MVA	88MVA	
615347 GRE-MCHENRY4230.00	SINGL1 54	110.30%			
3WNDTR 230/115 WND 2 1		93MVA			
615347 GRE-MCHENRY4230.00	SINGL1 55	102.30%			
3WNDTR 230/115 WND 2 1		86MVA			
615347 GRE-MCHENRY4230.00	SINGL1 56	108.50%			
3WNDTR 230/115 WND 2 1		91MVA			
615347 GRE-MCHENRY4230.00	SINGL1 58	108.70%			
3WNDTR 230/115 WND 2 1		91MVA			

615347 GRE-MCHENRY4230.00	SINGL1 59	111.50%	100.40%
3WNDTR 230/115 WND 2 1		94MVA	84MVA
615347 GRE-MCHENRY4230.00	SINGL1 61	116.90%	107.50%
3WNDTR 230/115 WND 2 1		98MVA	90MVA
615347 GRE-MCHENRY4230.00	SINGL1 62	156.00%	126.80%
3WNDTR 230/115 WND 2 1		131MVA	106MVA
615347 GRE-MCHENRY4230.00	SINGL1 63	116.30%	105.90%
3WNDTR 230/115 WND 2 1		98MVA	89MVA
615347 GRE-MCHENRY4230.00	SINGL1 64	113.60%	101.80%
3WNDTR 230/115 WND 2 1		95MVA	86MVA
615347 GRE-MCHENRY4230.00	SINGL1 65	113.40%	100.00%
3WNDTR 230/115 WND 2 1		95MVA	84MVA
615347 GRE-MCHENRY4230.00	SINGL1 66	161.90%	
3WNDTR 230/115 WND 2 1		136MVA	
615347 GRE-MCHENRY4230.00	SINGL1 67	116.40%	104.40%
3WNDTR 230/115 WND 2 1		98MVA	88MVA
615347 GRE-MCHENRY4230.00	SINGL1 68	111.50%	100.80%
3WNDTR 230/115 WND 2 1		94MVA	85MVA
615347 GRE-MCHENRY4230.00	SINGL1 69	111.90%	100.60%
3WNDTR 230/115 WND 2 1		94MVA	85MVA
615347 GRE-MCHENRY4230.00	SINGL1 70	110.30%	
3WNDTR 230/115 WND 2 1		93MVA	
615347 GRE-MCHENRY4230.00	SINGL1 71	106.00%	
3WNDTR 230/115 WND 2 1		89MVA	
615347 GRE-MCHENRY4230.00	SINGL1 72	113.60%	102.20%
3WNDTR 230/115 WND 2 1		95MVA	86MVA
615347 GRE-MCHENRY4230.00	SINGL1 73	113.30%	101.90%
3WNDTR 230/115 WND 2 1		95MVA	86MVA
615347 GRE-MCHENRY4230.00	SINGL1 74	113.80%	102.30%
3WNDTR 230/115 WND 2 1		96MVA	86MVA
615347 GRE-MCHENRY4230.00	SINGL1 75	113.80%	102.30%
3WNDTR 230/115 WND 2 1		96MVA	86MVA
615347 GRE-MCHENRY4230.00	SINGL1 76	111.90%	
3WNDTR 230/115 WND 2 1		94MVA	
615347 GRE-MCHENRY4230.00	SINGL1 77	111.80%	100.90%
3WNDTR 230/115 WND 2 1		94MVA	85MVA

615347 GRE-MCHENRY4230.00	SINGL1 78	113.70%	102.20%
3WNDTR 230/115 WND 2 1		96MVA	86MVA
615347 GRE-MCHENRY4230.00	SINGL1 79	113.70%	102.20%
3WNDTR 230/115 WND 2 1		96MVA	86MVA
615347 GRE-MCHENRY4230.00	SINGL1 80	113.50%	102.10%
3WNDTR 230/115 WND 2 1		95MVA	86MVA
615347 GRE-MCHENRY4230.00	SINGL1 81	111.90%	101.00%
3WNDTR 230/115 WND 2 1		94MVA	85MVA
615347 GRE-MCHENRY4230.00	SINGL1 82	111.70%	100.90%
3WNDTR 230/115 WND 2 1		94MVA	85MVA
615347 GRE-MCHENRY4230.00	SINGL1 83	114.10%	102.70%
3WNDTR 230/115 WND 2 1		96MVA	86MVA
615347 GRE-MCHENRY4230.00	C2.MAL FAULT	154.20%	115.20%
3WNDTR 230/115 WND 2 1		130MVA	97MVA
615347 GRE-MCHENRY4230.00	C2.MAL FAULT	127.00%	
3WNDTR 230/115 WND 2 1		107MVA	
615347 GRE-MCHENRY4230.00	SINGL4 1		114.00%
3WNDTR 230/115 WND 2 1			96MVA
615347 GRE-MCHENRY4230.00	SINGL4 51		125.60%
3WNDTR 230/115 WND 2 1			106MVA
615347 GRE-MCHENRY4230.00	SINGL4 67		114.00%
3WNDTR 230/115 WND 2 1			96MVA
615347 GRE-MCHENRY4230.00	SINGL4 68		123.00%
3WNDTR 230/115 WND 2 1			103MVA
659108 LOGAN 4 230.00	SINGL1 2	106.70%	
3WNDTR KW1A WND 1 1		213MVA	
659108 LOGAN 4 230.00	SINGL1 3	117.70%	
3WNDTR KW1A WND 1 1		235MVA	
659108 LOGAN 4 230.00	SINGL1 7	106.70%	
3WNDTR KW1A WND 1 1		213MVA	
659108 LOGAN 4 230.00	SINGL1 11	111.00%	
3WNDTR KW1A WND 1 1		222MVA	
659108 LOGAN 4 230.00	SINGL1 13	105.60%	
3WNDTR KW1A WND 1 1		211MVA	
659108 LOGAN 4 230.00	SINGL1 17	105.40%	
3WNDTR KW1A WND 1 1		211MVA	

659108 LOGAN 4 230.00	SINGL1 19	100.30%				
3WNDTR KW1A WND 1 1		201MVA				
659108 LOGAN 4 230.00	SINGL1 20	103.20%				
3WNDTR KW1A WND 1 1		206MVA				
659108 LOGAN 4 230.00	SINGL1 22	106.80%				
3WNDTR KW1A WND 1 1		214MVA				
659108 LOGAN 4 230.00	SINGL1 23	104.30%				
3WNDTR KW1A WND 1 1		209MVA				
659108 LOGAN 4 230.00	SINGL1 43	117.80%				
3WNDTR KW1A WND 1 1		236MVA				
659108 LOGAN 4 230.00	SINGL1 45	106.60%				
3WNDTR KW1A WND 1 1		213MVA				
659108 LOGAN 4 230.00	SINGL1 50	119.10%				
3WNDTR KW1A WND 1 1		238MVA				
659108 LOGAN 4 230.00	SINGL1 51	101.20%				
3WNDTR KW1A WND 1 1		202MVA				
659108 LOGAN 4 230.00	SINGL1 52	101.20%				
3WNDTR KW1A WND 1 1		202MVA				
659108 LOGAN 4 230.00	SINGL1 53	102.70%				
3WNDTR KW1A WND 1 1		205MVA				
659108 LOGAN 4 230.00	SINGL1 65	111.30%				
3WNDTR KW1A WND 1 1		223MVA				
659108 LOGAN 4 230.00	SINGL1 67	104.90%				
3WNDTR KW1A WND 1 1		210MVA				
659108 LOGAN 4 230.00	B2.SOR-VEL-M	106.70%				
3WNDTR KW1A WND 1 1		213MVA				
659108 LOGAN 4 230.00	C2.MAL FAULT	117.70%				
3WNDTR KW1A WND 1 1		235MVA				
659108 LOGAN 4 230.00	SINGL4 67					135.50%
3WNDTR KW1A WND 1 1						271MVA
659143 BLAISDELL 4230.00	SINGL1 66	124.00%		103.60%		
3WNDTR BLAISDL KV2A WND 1 1		206MVA		172MVA		
659143 BLAISDELL 4230.00	SINGL1 70	114.40%	113.00%	115.60%		117.00%
3WNDTR BLAISDL KV2A WND 1 1		190MVA	188MVA	192MVA		194MVA

CONTINGENCY LEGEND:

X--LABEL---X EVENTS

SINGL1 1 : OPEN LINE FROM BUS 603022 [SOURIS 7 115.00] TO BUS 603023 [MALLARD7 115.00] CKT 1
SINGL1 2 : OPEN LINE FROM BUS 603022 [SOURIS 7 115.00] TO BUS 605634 [VELVA TAP 115.00] CKT 1
SINGL1 3 : OPEN LINE FROM BUS 603023 [MALLARD7 115.00] TO BUS 652440 [NELSON 7 115.00] CKT 1
SINGL1 4 : OPEN LINE FROM BUS 603023 [MALLARD7 115.00] TO BUS 652452 [RUGBY 7 115.00] CKT 1
SINGL1 5 : OPEN LINE FROM BUS 603023 [MALLARD7 115.00] TO BUS 659155 [LOGAN 7 115.00] CKT 1
SINGL1 6 : OPEN LINE FROM BUS 603023 [MALLARD7 115.00] TO BUS 659165 [RUTHVILLECP7115.00] CKT 1
SINGL1 7 : OPEN LINE FROM BUS 605634 [VELVA TAP 115.00] TO BUS 615348 [GRE-MCHENRY7115.00] CKT 1
SINGL1 9 : OPEN LINE FROM BUS 615002 [GRE-COAL 42G22.000] TO BUS 615600 [GRE-COAL CR4230.00] CKT 1
SINGL1 10 : OPEN LINE FROM BUS 615010 [GRE-STANT41G18.000] TO BUS 615901 [GRE-STANTON4230.00] CKT 1
SINGL1 11 : OPEN LINE FROM BUS 615347 [GRE-MCHENRY4230.00] TO BUS 615900 [GRE-COAL TP4230.00] CKT 1
SINGL1 12 : OPEN LINE FROM BUS 615347 [GRE-MCHENRY4230.00] TO BUS 615903 [GRE-BALTA 4230.00] CKT 1
SINGL1 13 : OPEN LINE FROM BUS 615347 [GRE-MCHENRY4230.00] TO BUS 615348 [GRE-MCHENRY7115.00] TO BUS 615349 [GRE-MCHENRYT12.470] CKT 1
SINGL1 15 : OPEN LINE FROM BUS 615600 [GRE-COAL CR4230.00] TO BUS 615900 [GRE-COAL TP4230.00] CKT 1
SINGL1 16 : OPEN LINE FROM BUS 615600 [GRE-COAL CR4230.00] TO BUS 615901 [GRE-STANTON4230.00] CKT 1
SINGL1 17 : OPEN LINE FROM BUS 615600 [GRE-COAL CR4230.00] TO BUS 620381 [UNDERWD4 230.00] CKT 1
SINGL1 18 : OPEN LINE FROM BUS 615600 [GRE-COAL CR4230.00] TO BUS 615601 [GRE-COAL FM869.000] TO BUS 615602 [GRE-COALFM1T12.470] CKT 1
SINGL1 19 : OPEN LINE FROM BUS 615900 [GRE-COAL TP4230.00] TO BUS 615901 [GRE-STANTON4230.00] CKT 1
SINGL1 20 : OPEN LINE FROM BUS 615901 [GRE-STANTON4230.00] TO BUS 659106 [LELANDO4 230.00] CKT 1
SINGL1 21 : OPEN LINE FROM BUS 615903 [GRE-BALTA 4230.00] TO BUS 620290 [HARVEY 4 230.00] CKT 1
SINGL1 22 : OPEN LINE FROM BUS 615903 [GRE-BALTA 4230.00] TO BUS 620379 [RUGBY 4 230.00] CKT 1
SINGL1 23 : OPEN LINE FROM BUS 620179 [RUGBY T 13.800] TO BUS 620379 [RUGBY 4 230.00] TO BUS 620279 [RUGBOTP7 115.00] CKT 1
SINGL1 24 : OPEN LINE FROM BUS 620182 [BOTNO1 9 41.600] TO BUS 652455 [BOTTNO 7 115.00] CKT 1
SINGL1 25 : OPEN LINE FROM BUS 620183 [BOTNO2 9 41.600] TO BUS 652455 [BOTTNO 7 115.00] CKT 1
SINGL1 26 : OPEN LINE FROM BUS 620276 [NHARVEY7 115.00] TO BUS 659696 [HARVEY 7 115.00] CKT 1
SINGL1 27 : OPEN LINE FROM BUS 620277 [SELZ 7 115.00] TO BUS 620292 [CPESMON7 115.00] CKT 1
SINGL1 28 : OPEN LINE FROM BUS 620278 [ESMDOTP7 115.00] TO BUS 620292 [CPESMON7 115.00] CKT 1
SINGL1 29 : OPEN LINE FROM BUS 620278 [ESMDOTP7 115.00] TO BUS 659178 [BALTA 7 115.00] CKT 1
SINGL1 30 : OPEN LINE FROM BUS 620279 [RUGBOTP7 115.00] TO BUS 659264 [RUGBCPC7 115.00] CKT 1
SINGL1 31 : OPEN LINE FROM BUS 620279 [RUGBOTP7 115.00] TO BUS 659694 [ROLETTE7 115.00] CKT 1
SINGL1 32 : OPEN LINE FROM BUS 620290 [HARVEY 4 230.00] TO BUS 620381 [UNDERWD4 230.00] CKT 1
SINGL1 33 : OPEN LINE FROM BUS 620290 [HARVEY 4 230.00] TO BUS 659695 [HARVEY Y 230.00] CKT 1
SINGL1 34 : OPEN LINE FROM BUS 620292 [CPESMON7 115.00] TO BUS 659688 [ESMOND 7 115.00] CKT 1
SINGL1 35 : OPEN LINE FROM BUS 620300 [HARVEY 9 41.600] TO BUS 659695 [HARVEY Y 230.00] CKT 1
SINGL1 36 : OPEN LINE FROM BUS 620368 [RGBYWND4 230.00] TO BUS 620379 [RUGBY 4 230.00] CKT 1
SINGL1 37 : OPEN LINE FROM BUS 652222 [MAX 9 41.600] TO BUS 652449 [MAX 7 115.00] CKT 1

SINGL1 38 : OPEN LINE FROM BUS 652257 [DEVAUL 8 69.000] TO BUS 652416 [DEVAUL 7 115.00] CKT 1
SINGL1 39 : OPEN LINE FROM BUS 652257 [DEVAUL 8 69.000] TO BUS 659276 [NBCS7 1G 12.500] CKT 1
SINGL1 40 : OPEN LINE FROM BUS 652324 [RUGBY 9 41.800] TO BUS 652452 [RUGBY 7 115.00] CKT 1
SINGL1 41 : OPEN LINE FROM BUS 652416 [DEVAUL 7 115.00] TO BUS 652420 [NSALEM 7 115.00] CKT 1
SINGL1 42 : OPEN LINE FROM BUS 652420 [NSALEM 7 115.00] TO BUS 659109 [BASIN 7 115.00] CKT 1
SINGL1 43 : OPEN LINE FROM BUS 652440 [NELSON 7 115.00] TO BUS 652449 [MAX 7 115.00] CKT 1
SINGL1 44 : OPEN LINE FROM BUS 652440 [NELSON 7 115.00] TO BUS 659190 [NDPRAIRWND 7115.00] CKT 1
SINGL1 45 : OPEN LINE FROM BUS 652441 [GARRISN4 230.00] TO BUS 652442 [GARRISN7 115.00] CKT 1
SINGL1 46 : OPEN LINE FROM BUS 652441 [GARRISN4 230.00] TO BUS 652457 [GARISN1G 13.800] CKT 1
SINGL1 47 : OPEN LINE FROM BUS 652441 [GARRISN4 230.00] TO BUS 652458 [GARISN2G 13.800] CKT 1
SINGL1 48 : OPEN LINE FROM BUS 652441 [GARRISN4 230.00] TO BUS 652459 [GARISN3G 13.800] CKT 1
SINGL1 49 : OPEN LINE FROM BUS 652441 [GARRISN4 230.00] TO BUS 659106 [LELANDO4 230.00] CKT 1
SINGL1 50 : OPEN LINE FROM BUS 652442 [GARRISN7 115.00] TO BUS 652449 [MAX 7 115.00] CKT 1
SINGL1 51 : OPEN LINE FROM BUS 652442 [GARRISN7 115.00] TO BUS 652460 [GARISN4G 13.800] CKT 1
SINGL1 52 : OPEN LINE FROM BUS 652442 [GARRISN7 115.00] TO BUS 652461 [GARISN5G 13.800] CKT 1
SINGL1 53 : OPEN LINE FROM BUS 652442 [GARRISN7 115.00] TO BUS 659113 [VOLTAIR7 115.00] CKT 1
SINGL1 54 : OPEN LINE FROM BUS 652446 [PLEASANT LK7115.00] TO BUS 652452 [RUGBY 7 115.00] CKT 1
SINGL1 55 : OPEN LINE FROM BUS 652452 [RUGBY 7 115.00] TO BUS 652453 [TOWNER 7 115.00] CKT 1
SINGL1 56 : OPEN LINE FROM BUS 652452 [RUGBY 7 115.00] TO BUS 659264 [RUGBCPC7 115.00] CKT 1
SINGL1 57 : OPEN LINE FROM BUS 652453 [TOWNER 7 115.00] TO BUS 652464 [DENBIGH TAP7115.00] CKT 1
SINGL1 58 : OPEN LINE FROM BUS 652453 [TOWNER 7 115.00] TO BUS 659151 [BOTTNOJCTCP7115.00] CKT 1
SINGL1 59 : OPEN LINE FROM BUS 652455 [BOTTNO 7 115.00] TO BUS 659151 [BOTTNOJCTCP7115.00] CKT 1
SINGL1 60 : OPEN LINE FROM BUS 652464 [DENBIGH TAP7115.00] TO BUS 659113 [VOLTAIR7 115.00] CKT 1
SINGL1 61 : OPEN LINE FROM BUS 659105 [LELANDO3 345.00] TO BUS 659111 [LELAN32G 20.000] CKT 1
SINGL1 62 : OPEN LINE FROM BUS 659106 [LELANDO4 230.00] TO BUS 659108 [LOGAN 4 230.00] CKT 1
SINGL1 63 : OPEN LINE FROM BUS 659106 [LELANDO4 230.00] TO BUS 659110 [LELAN41G 22.000] CKT 1
SINGL1 64 : OPEN LINE FROM BUS 659106 [LELANDO4 230.00] TO BUS 659109 [BASIN 7 115.00] TO BUS 659200 [BASIN 9 13.800] CKT 1
SINGL1 65 : OPEN LINE FROM BUS 659108 [LOGAN 4 230.00] TO BUS 659143 [BLAISDELL 4230.00] CKT 1
SINGL1 66 : OPEN LINE FROM BUS 659108 [LOGAN 4 230.00] TO BUS 659155 [LOGAN 7 115.00] TO BUS 659208 [LOGAN 913.800] CKT 1
SINGL1 67 : OPEN LINE FROM BUS 659144 [BLAISDELL 7115.00] TO BUS 659261 [BTHOLD 7 115.00] CKT 1
SINGL1 68 : OPEN LINE FROM BUS 659149 [THORNE CP7115.00] TO BUS 659694 [ROLETTE7 115.00] CKT 1
SINGL1 69 : OPEN LINE FROM BUS 659150 [WHITBY -CP7115.00] TO BUS 659166 [DUNNING7 115.00] CKT 1
SINGL1 70 : OPEN LINE FROM BUS 659155 [LOGAN 7 115.00] TO BUS 659307 [SWMINOT CP7115.00] CKT 1
SINGL1 71 : OPEN LINE FROM BUS 659165 [RUTHVILLECP7115.00] TO BUS 659166 [DUNNING7 115.00] CKT 1
SINGL1 72 : OPEN LINE FROM BUS 659178 [BALTA 7 115.00] TO BUS 659179 [RUGBYNP7 115.00] CKT 1
SINGL1 73 : OPEN LINE FROM BUS 659179 [RUGBYNP7 115.00] TO BUS 659264 [RUGBCPC7 115.00] CKT 1

SINGL1 74 : OPEN LINE FROM BUS 659190 [NDPRAIRWND 7115.00] TO BUS 659325 [NDPRAIRWND 934.500] CKT 1
SINGL1 75 : OPEN LINE FROM BUS 659194 [NDPRAIRWND1W0.6900] TO BUS 659325 [NDPRAIRWND 934.500] CKT 1
SINGL1 76 : OPEN LINE FROM BUS 659261 [BTHOLD 7 115.00] TO BUS 659307 [SWMINOT CP7115.00] CKT 1
SINGL1 77 : OPEN LINE FROM BUS 659264 [RUGBCPC7 115.00] TO BUS 659697 [RUGBYCP9 41.600] CKT 1
SINGL1 78 : OPEN LINE FROM BUS 659688 [ESMOND 7 115.00] TO BUS 659689 [ESMOND Y 115.00] CKT 1
SINGL1 79 : OPEN LINE FROM BUS 659689 [ESMOND Y 115.00] TO BUS 659690 [ESMOND 8 69.000] CKT 1
SINGL1 80 : OPEN LINE FROM BUS 659691 [ROLETTE9 41.600] TO BUS 659693 [ROLETTEY 115.00] CKT 1
SINGL1 81 : OPEN LINE FROM BUS 659692 [ROLETTE8 69.000] TO BUS 659693 [ROLETTEY 115.00] CKT 1
SINGL1 82 : OPEN LINE FROM BUS 659693 [ROLETTEY 115.00] TO BUS 659694 [ROLETTE7 115.00] CKT 1
SINGL1 83 : OPEN LINE FROM BUS 659695 [HARVEY Y 230.00] TO BUS 659696 [HARVEY 7 115.00] CKT 1
B2.SOR-VEL-M: OPEN LINE FROM BUS 605634 [VELVA TAP 115.00] TO BUS 615348 [GRE-MCHENRY7115.00] CKT 1
OPEN LINE FROM BUS 605634 [VELVA TAP 115.00] TO BUS 603022 [SOURIS 7 115.00] CKT 1
C2.MAL FAULT: OPEN LINE FROM BUS 603023 [MALLARD7 115.00] TO BUS 652440 [NELSON 7 115.00] CKT 1
OPEN LINE FROM BUS 603023 [MALLARD7 115.00] TO BUS 652452 [RUGBY 7 115.00] CKT 1
OPEN LINE FROM BUS 603023 [MALLARD7 115.00] TO BUS 659155 [LOGAN 7 115.00] CKT 1
OPEN LINE FROM BUS 603023 [MALLARD7 115.00] TO BUS 659165 [RUTHVILLECP7115.00] CKT 1
OPEN LINE FROM BUS 603023 [MALLARD7 115.00] TO BUS 603022 [SOURIS 7 115.00] CKT 1
C2.MAL FAULT: OPEN LINE FROM BUS 652440 [NELSON 7 115.00] TO BUS 652449 [MAX 7 115.00] CKT 1
OPEN LINE FROM BUS 652440 [NELSON 7 115.00] TO BUS 659190 [NDPRAIRWND 7115.00] CKT 1
OPEN LINE FROM BUS 652440 [NELSON 7 115.00] TO BUS 603023 [MALLARD7 115.00] CKT 1
OPEN LINE FROM BUS 652449 [MAX 7 115.00] TO BUS 652222 [MAX 9 41.600] CKT 1
OPEN LINE FROM BUS 652449 [MAX 7 115.00] TO BUS 652442 [GARRISN7 115.00] CKT 1
SINGL4 1 : OPEN LINE FROM BUS 10 [LOGAN TERT 13.800] TO BUS 659108 [LOGAN 4 230.00] TO BUS 659155 [LOGAN 7 115.00] CKT 1
SINGL4 51 : OPEN LINE FROM BUS 652441 [GARRISN4 230.00] TO BUS 659108 [LOGAN 4 230.00] CKT 1
SINGL4 67 : OPEN LINE FROM BUS 659108 [LOGAN 4 230.00] TO BUS 659155 [LOGAN 7 115.00] TO BUS 659208 [LOGAN 913.800] CKT 2
SINGL4 68 : OPEN LINE FROM BUS 659113 [VOLTAIR7 115.00] TO BUS 659155 [LOGAN 7 115.00] CKT 1

CONTINGENCY CASE BUSES WITH VOLTAGE LESS THAN 0.9500 - ALL VIOLATIONS

X--- MONITORED ELEMENT ----X	X---LABEL--X	Bulk basecase	Bulk Option 1	Bulk Option 2	Bulk Option 3
659108 LOGAN 4 230.00	SINGL1 2	0.94477			
659108 LOGAN 4 230.00	SINGL1 3	0.94484			
659108 LOGAN 4 230.00	SINGL1 7	0.94541			
659108 LOGAN 4 230.00	SINGL1 13	0.93948			
659108 LOGAN 4 230.00	SINGL1 22	0.94513			
659108 LOGAN 4 230.00	SINGL1 23	0.94557			

659108 LOGAN 4	230.00	SINGL1 43	0.94506
659108 LOGAN 4	230.00	SINGL1 50	0.94619
659108 LOGAN 4	230.00	SINGL1 62	0.91593
659108 LOGAN 4	230.00	B2.SOR-VEL-M	0.94473
659108 LOGAN 4	230.00	C2.MAL FAULT	0.94476
659143 BLAISDELL	4230.00	SINGL1 13	0.94786
659143 BLAISDELL	4230.00	SINGL1 62	0.9277
659143 BLAISDELL	4230.00	SINGL1 70	0.94738

CONTINGENCY LEGEND:
X--LABEL---X EVENTS

SINGL1 2 : OPEN LINE FROM BUS 603022 [SOURIS 7 115.00] TO BUS 605634 [VELVA TAP 115.00] CKT 1

SINGL1 3 : OPEN LINE FROM BUS 603023 [MALLARD7 115.00] TO BUS 652440 [NELSON 7 115.00] CKT 1

SINGL1 7 : OPEN LINE FROM BUS 605634 [VELVA TAP 115.00] TO BUS 615348 [GRE-MCHENRY7115.00] CKT 1

SINGL1 13 : OPEN LINE FROM BUS 615347 [GRE-MCHENRY4230.00] TO BUS 615348 [GRE-MCHENRY7115.00] TO BUS 615349 [GRE-MCHENRYT12.470] CKT 1

SINGL1 22 : OPEN LINE FROM BUS 615903 [GRE-BALTA 4230.00] TO BUS 620379 [RUGBY 4 230.00] CKT 1

SINGL1 23 : OPEN LINE FROM BUS 620179 [RUGBY T 13.800] TO BUS 620379 [RUGBY 4 230.00] TO BUS 620279 [RUGBOTP7 115.00] CKT 1

SINGL1 43 : OPEN LINE FROM BUS 652440 [NELSON 7 115.00] TO BUS 652449 [MAX 7 115.00] CKT 1

SINGL1 50 : OPEN LINE FROM BUS 652442 [GARRISN7 115.00] TO BUS 652449 [MAX 7 115.00] CKT 1

SINGL1 62 : OPEN LINE FROM BUS 659106 [LELANDO4 230.00] TO BUS 659108 [LOGAN 4 230.00] CKT 1

SINGL1 70 : OPEN LINE FROM BUS 659155 [LOGAN 7 115.00] TO BUS 659307 [SWMINOT CP7115.00] CKT 1

B2.SOR-VEL-M: OPEN LINE FROM BUS 605634 [VELVA TAP 115.00] TO BUS 615348 [GRE-MCHENRY7115.00] CKT 1
OPEN LINE FROM BUS 605634 [VELVA TAP 115.00] TO BUS 603022 [SOURIS 7 115.00] CKT 1

C2.MAL FAULT: OPEN LINE FROM BUS 603023 [MALLARD7 115.00] TO BUS 652440 [NELSON 7 115.00] CKT 1
OPEN LINE FROM BUS 603023 [MALLARD7 115.00] TO BUS 652452 [RUGBY 7 115.00] CKT 1
OPEN LINE FROM BUS 603023 [MALLARD7 115.00] TO BUS 659155 [LOGAN 7 115.00] CKT 1
OPEN LINE FROM BUS 603023 [MALLARD7 115.00] TO BUS 659165 [RUTHVILLECP7115.00] CKT 1
OPEN LINE FROM BUS 603023 [MALLARD7 115.00] TO BUS 603022 [SOURIS 7 115.00] CKT 1

C2.MAL FAULT: TRIP LINE FROM BUS 603023 [MALLARD7 115.00] TO BUS 652452 [RUGBY 7 115.00] CKT 1
TRIP LINE FROM BUS 603023 [MALLARD7 115.00] TO BUS 659165 [RUTHVILLECP7115.00] CKT 1

C2.MAL FAULT: OPEN LINE FROM BUS 652440 [NELSON 7 115.00] TO BUS 652449 [MAX 7 115.00] CKT 1
OPEN LINE FROM BUS 652440 [NELSON 7 115.00] TO BUS 659190 [NDPRAIRWND 7115.00] CKT 1
OPEN LINE FROM BUS 652440 [NELSON 7 115.00] TO BUS 603023 [MALLARD7 115.00] CKT 1
OPEN LINE FROM BUS 652449 [MAX 7 115.00] TO BUS 652222 [MAX 9 41.600] CKT 1
OPEN LINE FROM BUS 652449 [MAX 7 115.00] TO BUS 652442 [GARRISN7 115.00] CKT 1

Appendix C: Comparison of Base Plan and System Alternative.

System Intact and Category B Voltage Results for Monitored Area (GRE Contingency Program)

MRO 2013 Winter Peak North Transfer Model	2024 Winter Peak Base Model M700-wp24aa-bus	2024 Winter Peak Option A M701-wp24aa-bus	2024 Winter Peak Option B M702-wp24aa-bus

UNDERVOLTAGE

SUBSTATION # NAME	KV	VOLTAGE %	DROP %	VOLTAGE %	DROP %	VOLTAGE %	DROP %	CONTINGENCY PERFORMED FROM TO CKT
603022 SOURIS 7	115.0	94.58						SYSTEM INTACT
		86.44	8.13					603022 SOURIS 7 115.0 603023 MALLARD7 115.0 1
		89.08	5.5					603022 SOURIS 7 115.0 605634 VELVA TAP 115.0 1
		80.66	13.91					603023 MALLARD7 115.0 659155 LOGAN 7 115.0 1
		89.27	5.31					605634 VELVA TAP 115.0 615348 GRE-MCHENRY7115.0 1
		87.99	6.58					615347-615348-615349 GRE-MCHENRY4 230/115/12 1
		89.07	5.51					659106 LELANDO4 230.0 659108 LOGAN 4 230.0 1
		86.2	8.38					659108-659155-659208 LOGAN 4 230/115/13 1
		89.07	5.51					CONTINGENCY B2.SOR-VEL-MCH
603023 MALLARD7	115.0	94.86						SYSTEM INTACT
		90.7	4.16					603022 SOURIS 7 115.0 605634 VELVA TAP 115.0 1
		80.18	14.68					603023 MALLARD7 115.0 659155 LOGAN 7 115.0 1
		90.84	4.02					605634 VELVA TAP 115.0 615348 GRE-MCHENRY7115.0 1
		89.54	5.32					615347-615348-615349 GRE-MCHENRY4 230/115/12 1
		90.83	4.03					615903 GRE-BALTA 4230.0 620379 RUGBY 4 230.0 1
		90.66	4.2					620179-620379-620279 RUGBY 4 230/115/13 1
		89.09	5.77					659106 LELANDO4 230.0 659108 LOGAN 4 230.0 1
		86.06	8.8					659108-659155-659208 LOGAN 4 230/115/13 1
		90.69	4.17					CONTINGENCY B2.SOR-VEL-MCH
605634 VELVA TAP	115.0	98.88						SYSTEM INTACT
		94.15	4.73					603022 SOURIS 7 115.0 603023 MALLARD7 115.0 1
		90.79	8.1					603023 MALLARD7 115.0 659155 LOGAN 7 115.0 1
		89.34	9.54					605634 VELVA TAP 115.0 615348 GRE-MCHENRY7115.0 1
		88.38	10.51					615347-615348-615349 GRE-MCHENRY4 230/115/12 1
		94	4.88					659108-659155-659208 LOGAN 4 230/115/13 1
615348 GRE-	115.0	100.08						SYSTEM INTACT

MCHENRY7								
		88.45	11.63					615347-615348-615349 GRE-MCHENRY4 230/115/12 1
652440 NELSON 7	115.0	95.05						SYSTEM INTACT
		91.32	3.73					603022 SOURIS 7 115.0 605634 VELVA TAP 115.0 1
		81.29	13.76					603023 MALLARD7 115.0 659155 LOGAN 7 115.0 1
		91.45	3.61					605634 VELVA TAP 115.0 615348 GRE-MCHENRY7115.0 1
		90.12	4.93					615347-615348-615349 GRE-MCHENRY4 230/115/12 1
		91.34	3.71					615903 GRE-BALTA 4230.0 620379 RUGBY 4 230.0 1
		91.26	3.8					620179-620379-620279 RUGBY 4 230/115/13 1
		89.04	6.01					659106 LELANDO4 230.0 659108 LOGAN 4 230.0 1
		86.39	8.66					659108-659155-659208 LOGAN 4 230/115/13 1
		91.31	3.74					CONTINGENCY B2.SOR-VEL-MCH
652446 PLEASANT LK7	115.0	98.3		98.88		98.91		SYSTEM INTACT
		90.98	7.33	91.62	7.26	91.66	7.25	615903 GRE-BALTA 4230.0 620379 RUGBY 4 230.0 1
		88.38	9.92	90.98	7.89	91.05	7.87	620179-620379-620279 RUGBY 4 230/115/13 1
				93.64	5.24	93.65	5.26	652446 PLEASANT LK7115.0 652452 RUGBY 7 115.0 1
		94.77	3.53					CONTINGENCY C1.MAL FAULT-5T12, 5T11
652447 LEEDS 7	115.0	97.24		97.67		97.7		SYSTEM INTACT
		92.27	4.97	92.35	5.32	92.38	5.32	615903 GRE-BALTA 4230.0 620379 RUGBY 4 230.0 1
		90.65	6.59	92.01	5.66	92.06	5.64	620179-620379-620279 RUGBY 4 230/115/13 1
				93.75	3.93	93.76	3.94	652446 PLEASANT LK7115.0 652452 RUGBY 7 115.0 1
652449 MAX 7	115.0	96.63						SYSTEM INTACT
		94.31	2.32					603022 SOURIS 7 115.0 605634 VELVA TAP 115.0 1
		87.17	9.46					603023 MALLARD7 115.0 659155 LOGAN 7 115.0 1
		92.85	3.79					615347-615348-615349 GRE-MCHENRY4 230/115/12 1
		94	2.63					615903 GRE-BALTA 4230.0 620379 RUGBY 4 230.0 1
		94.01	2.62					620179-620379-620279 RUGBY 4 230/115/13 1
		91.37	5.26					652442 GARRISN7 115.0 652449 MAX 7 115.0 1
		91.49	5.15					659106 LELANDO4 230.0 659108 LOGAN 4 230.0 1
		90.04	6.59					659108-659155-659208 LOGAN 4 230/115/13 1
		94.3	2.33					CONTINGENCY B2.SOR-VEL-MCH
652452 RUGBY 7	115.0	98.61		99.23		99.26		SYSTEM INTACT
		90.69	7.92	91.47	7.76	91.5	7.76	615903 GRE-BALTA 4230.0 620379 RUGBY 4 230.0 1
		87.84	10.77	90.76	8.47	90.82	8.44	620179-620379-620279 RUGBY 4 230/115/13 1
652453 TOWNER 7	115.0	98.15		98.87		98.92		SYSTEM INTACT
		93.86	4.3					603023 MALLARD7 115.0 659155 LOGAN 7 115.0 1
		91.82	6.33					615347-615348-615349 GRE-MCHENRY4 230/115/12 1
		93.08	5.08	93.81	5.06	93.83	5.08	615348 GRE-MCHENRY7115.0 659113 VOLTAIR7 115.0 1
		91.03	7.13	92.06	6.81	92.11	6.81	615903 GRE-BALTA 4230.0 620379 RUGBY 4 230.0 1
		89.83	8.32	92.54	6.33	92.61	6.31	620179-620379-620279 RUGBY 4 230/115/13 1

652455 BOTTNO 7	115.0	94.8		95.55		95.6		SYSTEM INTACT
		92.74	2.06					603022 SOURIS 7 115.0 603023 MALLARD7 115.0 1
		90.29	4.51					603023 MALLARD7 115.0 659155 LOGAN 7 115.0 1
				94.77	0.78			615347 GRE-MCHENRY4230.0 615900 GRE-COAL TP4230.0 1
		88.15	6.65	92.27	3.28	92.32	3.28	615347-615348-615349 GRE-MCHENRY4 230/115/12 1
		89.47	5.33	90.24	5.31	90.27	5.33	615348 GRE-MCHENRY7115.0 659113 VOLTAIR7 115.0 1
		92.73	2.07	93.72	1.83	93.78	1.82	615600 GRE-COAL CR4230.0 620381 UNDERWD4 230.0 1
		92.67	2.13	93.79	1.76	93.86	1.74	615903 GRE-BALTA 4230.0 620290 HARVEY 4 230.0 1
		87.31	7.49	88.4	7.15	88.45	7.14	615903 GRE-BALTA 4230.0 620379 RUGBY 4 230.0 1
		86.05	8.75	88.91	6.64	88.98	6.62	620179-620379-620279 RUGBY 4 230/115/13 1
						93.67	1.93	620290 HARVEY 4 230.0 620381 UNDERWD4 230.0 1
				94.24	1.31	94.27	1.33	652453 TOWNER 7 115.0 652464 DENBIGH TAP7115.0 1
				93.63	1.92	93.66	1.94	652464 DENBIGH TAP7115.0 659113 VOLTAIR7 115.0 1
				94.21	1.34	94.28	1.32	659106 LELANDO4 230.0 659108 LOGAN 4 230.0 1
		92.34	2.46					659108-659155-659208 LOGAN 4 230/115/13 1
652464 DENBIGH TAP7	115.0	98.3		99.04		99.09		SYSTEM INTACT
		93.78	4.52					603023 MALLARD7 115.0 659155 LOGAN 7 115.0 1
		91.36	6.94					615347-615348-615349 GRE-MCHENRY4 230/115/12 1
		92.66	5.64	93.42	5.62	93.44	5.65	615348 GRE-MCHENRY7115.0 659113 VOLTAIR7 115.0 1
		91.46	6.84	92.54	6.5	92.59	6.5	615903 GRE-BALTA 4230.0 620379 RUGBY 4 230.0 1
		90.46	7.84	93.12	5.92	93.19	5.89	620179-620379-620279 RUGBY 4 230/115/13 1
652590 SNAKECR7	115.0	96.76						SYSTEM INTACT
		94.78	1.98					603023 MALLARD7 115.0 659155 LOGAN 7 115.0 1
		94.17	2.59					615347-615348-615349 GRE-MCHENRY4 230/115/12 1
		92.89	3.87					659106 LELANDO4 230.0 659108 LOGAN 4 230.0 1
		94.11	2.65					659108-659155-659208 LOGAN 4 230/115/13 1
659108 LOGAN 4	230.0	96.66						SYSTEM INTACT
		94.48	2.19					603022 SOURIS 7 115.0 605634 VELVA TAP 115.0 1
		94.48	2.18					603023 MALLARD7 115.0 652440 NELSON 7 115.0 1
		94.54	2.12					605634 VELVA TAP 115.0 615348 GRE-MCHENRY7115.0 1
		93.95	2.72					615347-615348-615349 GRE-MCHENRY4 230/115/12 1
		94.54	2.12					615903 GRE-BALTA 4230.0 620379 RUGBY 4 230.0 1
		94.54	2.13					620179-620379-620279 RUGBY 4 230/115/13 1
		94.51	2.16					652440 NELSON 7 115.0 652449 MAX 7 115.0 1
		91.15	5.51					659106 LELANDO4 230.0 659108 LOGAN 4 230.0 1
		94.47	2.19					CONTINGENCY B2.SOR-VEL-MCH
659113 VOLTAIR7	115.0	100.03		100.99		101.05		SYSTEM INTACT
		93.79	6.24					603023 MALLARD7 115.0 659155 LOGAN 7 115.0 1
		88.45	11.58	94.99	6			615347-615348-615349 GRE-MCHENRY4 230/115/12 1

		90.22	9.81	91.11	9.88	91.13	9.92	615348 GRE-MCHENRY7115.0 659113 VOLTAIR7 115.0 1
659143 BLAISDELL 4	230.0	96.82						SYSTEM INTACT
		94.79	2.04					615347-615348-615349 GRE-MCHENRY4 230/115/12 1
		92.45	4.38					659106 LELANDO4 230.0 659108 LOGAN 4 230.0 1
		94.74	2.08					659155 LOGAN 7 115.0 659307 SWMINOT CP7115.0 1
659144 BLAISDELL 7	115.0	95.71		97.13		97.17		SYSTEM INTACT
		93.8	1.91					603022 SOURIS 7 115.0 605634 VELVA TAP 115.0 1
		93.86	1.85					605634 VELVA TAP 115.0 615348 GRE-MCHENRY7115.0 1
		93.1	2.61					615347-615348-615349 GRE-MCHENRY4 230/115/12 1
		93.84	1.87					615903 GRE-BALTA 4230.0 620379 RUGBY 4 230.0 1
		93.75	1.96					620179-620379-620279 RUGBY 4 230/115/13 1
		90.65	5.06	94.93	2.2	94.99	2.18	659106 LELANDO4 230.0 659108 LOGAN 4 230.0 1
		92.45	3.26					659108-659155-659208 LOGAN 4 230/115/13 1
		91.73	3.98	92.73	4.4	92.77	4.4	659155 LOGAN 7 115.0 659307 SWMINOT CP7115.0 1
		93.8	1.91					CONTINGENCY B2.SOR-VEL-MCH
659149 THORNE CP7	115.0	90.94		91.54		91.58		SYSTEM INTACT
		89.79	1.14					603022 SOURIS 7 115.0 603023 MALLARD7 115.0 1
		88.22	2.71					603023 MALLARD7 115.0 659155 LOGAN 7 115.0 1
				91.06	0.48	90.96	0.62	603023 MALLARD7 115.0 659165 RUTHVILLECP7115.0 1
		88.44	2.5	90.5	1.04	90.54	1.04	615347-615348-615349 GRE-MCHENRY4 230/115/12 1
		89.4	1.54	89.94	1.6	89.97	1.6	615348 GRE-MCHENRY7115.0 659113 VOLTAIR7 115.0 1
		89.31	1.63	90.09	1.45	90.14	1.43	615600 GRE-COAL CR4230.0 620381 UNDERWD4 230.0 1
		89	1.94	89.97	1.57	90.03	1.55	615903 GRE-BALTA 4230.0 620290 HARVEY 4 230.0 1
		81.62	9.32	82.43	9.11	82.48	9.1	615903 GRE-BALTA 4230.0 620379 RUGBY 4 230.0 1
		77.71	13.23	81.21	10.33	81.29	10.29	620179-620379-620279 RUGBY 4 230/115/13 1
						89.85	1.73	620290 HARVEY 4 230.0 620381 UNDERWD4 230.0 1
				91.16	0.38			652442 GARRISN7 115.0 652449 MAX 7 115.0 1
				90.99	0.55	91.03	0.55	652464 DENBIGH TAP7115.0 659113 VOLTAIR7 115.0 1
				90.65	0.89	90.71	0.87	659106 LELANDO4 230.0 659108 LOGAN 4 230.0 1
		89.73	1.21					659108-659155-659208 LOGAN 4 230/115/13 1
659150 WHITBY -CP7	115.0	90.78		95.59		95.5		SYSTEM INTACT
				93.18	2.41			603022 SOURIS 7 115.0 603268 MOUSE RIV 115.0 1
		85.67	5.11					603022 SOURIS 7 115.0 605634 VELVA TAP 115.0 1
		72.15	18.64					603023 MALLARD7 115.0 659155 LOGAN 7 115.0 1
				89.52	6.08	86.58	8.92	603023 MALLARD7 115.0 659165 RUTHVILLECP7115.0 1
						93.18	2.32	603268 MOUSE RIV 115.0 603270 WARD CO 115.0 1
		85.85	4.93					605634 VELVA TAP 115.0 615348 GRE-MCHENRY7115.0 1
				93.48	2.12	93.41	2.09	615347 GRE-MCHENRY4230.0 615900 GRE-COAL TP4230.0 1

		84.24	6.55					615347-615348-615349 GRE-MCHENRY4 230/115/12 1
				93.79	1.8	93.71	1.8	615600 GRE-COAL CR4230.0 620381 UNDERWD4 230.0 1
		85.83	4.95	92.99	2.6	92.89	2.61	615903 GRE-BALTA 4230.0 620379 RUGBY 4 230.0 1
		85.63	5.16	93.4	2.2	93.3	2.2	620179-620379-620279 RUGBY 4 230/115/13 1
						93.72	1.79	620290 HARVEY 4 230.0 620381 UNDERWD4 230.0 1
		83.67	7.11	92.74	2.86	92.68	2.83	659106 LELANDO4 230.0 659108 LOGAN 4 230.0 1
		79.84	10.94					659108-659155-659208 LOGAN 4 230/115/13 1
		85.66	5.12					CONTINGENCY B2.SOR-VEL-MCH
659151 BOTTNOJCTCP7	115.0	94.85		95.6		95.65		SYSTEM INTACT
		92.79	2.06					603022 SOURIS 7 115.0 603023 MALLARD7 115.0 1
		90.35	4.5					603023 MALLARD7 115.0 659155 LOGAN 7 115.0 1
				94.82	0.78			615347 GRE-MCHENRY4230.0 615900 GRE-COAL TP4230.0 1
		88.21	6.64	92.32	3.28	92.37	3.27	615347-615348-615349 GRE-MCHENRY4 230/115/12 1
		89.53	5.32	90.29	5.3	90.32	5.32	615348 GRE-MCHENRY7115.0 659113 VOLTAIR7 115.0 1
		92.78	2.07	93.77	1.83	93.83	1.82	615600 GRE-COAL CR4230.0 620381 UNDERWD4 230.0 1
		92.72	2.13	93.84	1.76	93.91	1.74	615903 GRE-BALTA 4230.0 620290 HARVEY 4 230.0 1
		87.37	7.48	88.46	7.14	88.51	7.14	615903 GRE-BALTA 4230.0 620379 RUGBY 4 230.0 1
		86.1	8.75	88.96	6.64	89.03	6.61	620179-620379-620279 RUGBY 4 230/115/13 1
						93.72	1.93	620290 HARVEY 4 230.0 620381 UNDERWD4 230.0 1
				94.29	1.31	94.32	1.32	652453 TOWNER 7 115.0 652464 DENBIGH TAP7115.0 1
				93.68	1.92	93.71	1.94	652464 DENBIGH TAP7115.0 659113 VOLTAIR7 115.0 1
				94.26	1.34	94.33	1.32	659106 LELANDO4 230.0 659108 LOGAN 4 230.0 1
		92.39	2.46					659108-659155-659208 LOGAN 4 230/115/13 1
659155 LOGAN 7	115.0	96.23						SYSTEM INTACT
		92.97	3.26					603022 SOURIS 7 115.0 605634 VELVA TAP 115.0 1
		93.53	2.7					603023 MALLARD7 115.0 652440 NELSON 7 115.0 1
		93.08	3.15					605634 VELVA TAP 115.0 615348 GRE-MCHENRY7115.0 1
		92.11	4.12					615347-615348-615349 GRE-MCHENRY4 230/115/12 1
		93.07	3.16					615903 GRE-BALTA 4230.0 620379 RUGBY 4 230.0 1
		92.99	3.24					620179-620379-620279 RUGBY 4 230/115/13 1
		90.52	5.7					659106 LELANDO4 230.0 659108 LOGAN 4 230.0 1
		87.08	9.15					659108-659155-659208 LOGAN 4 230/115/13 1
		92.97	3.26					CONTINGENCY B2.SOR-VEL-MCH
659165 RUTHVILLECP7	115.0	92.54		96.79		96.71		SYSTEM INTACT
				94.65	2.13			603022 SOURIS 7 115.0 603268 MOUSE RIV 115.0 1
		88.08	4.46					603022 SOURIS 7 115.0 605634 VELVA TAP 115.0 1
		76.6	15.94					603023 MALLARD7 115.0 659155 LOGAN 7 115.0 1
				91.43	5.36	88.87	7.83	603023 MALLARD7 115.0 659165 RUTHVILLECP7115.0 1

						94.65	2.05	603268 MOUSE RIV 115.0 603270 WARD CO 115.0 1
		88.23	4.31					605634 VELVA TAP 115.0 615348 GRE-MCHENRY7115.0 1
				94.92	1.87	94.86	1.85	615347 GRE-MCHENRY4230.0 615900 GRE-COAL TP4230.0 1
		86.84	5.7					615347-615348-615349 GRE-MCHENRY4 230/115/12 1
		88.22	4.32	94.48	2.3	94.4	2.31	615903 GRE-BALTA 4230.0 620379 RUGBY 4 230.0 1
		88.04	4.5	94.84	1.95	94.76	1.95	620179-620379-620279 RUGBY 4 230/115/13 1
		86.35	6.19	94.26	2.53	94.21	2.5	659106 LELANDO4 230.0 659108 LOGAN 4 230.0 1
		83.07	9.48					659108-659155-659208 LOGAN 4 230/115/13 1
		88.07	4.47					CONTINGENCY B2.SOR-VEL-MCH
659166 DUNNING7	115.0	91.16		95.94		95.85		SYSTEM INTACT
				93.54	2.4			603022 SOURIS 7 115.0 603268 MOUSE RIV 115.0 1
		86.08	5.08					603022 SOURIS 7 115.0 605634 VELVA TAP 115.0 1
		72.67	18.49					603023 MALLARD7 115.0 659155 LOGAN 7 115.0 1
				89.9	6.04	86.99	8.86	603023 MALLARD7 115.0 659165 RUTHVILLECP7115.0 1
						93.54	2.31	603268 MOUSE RIV 115.0 603270 WARD CO 115.0 1
		86.26	4.9					605634 VELVA TAP 115.0 615348 GRE-MCHENRY7115.0 1
				93.84	2.1	93.78	2.08	615347 GRE-MCHENRY4230.0 615900 GRE-COAL TP4230.0 1
		84.66	6.5					615347-615348-615349 GRE-MCHENRY4 230/115/12 1
				94.15	1.79	94.07	1.79	615600 GRE-COAL CR4230.0 620381 UNDERWD4 230.0 1
		86.24	4.92	93.35	2.59	93.26	2.59	615903 GRE-BALTA 4230.0 620379 RUGBY 4 230.0 1
		86.04	5.12	93.76	2.19	93.67	2.19	620179-620379-620279 RUGBY 4 230/115/13 1
						94.08	1.77	620290 HARVEY 4 230.0 620381 UNDERWD4 230.0 1
		84.09	7.07	93.1	2.84	93.04	2.81	659106 LELANDO4 230.0 659108 LOGAN 4 230.0 1
		80.3	10.86					659108-659155-659208 LOGAN 4 230/115/13 1
		86.07	5.09					CONTINGENCY B2.SOR-VEL-MCH
659178 BALTA 7	115.0	98.56		99.17		99.2		SYSTEM INTACT
		90.59	7.96	91.37	7.8	91.4	7.8	615903 GRE-BALTA 4230.0 620379 RUGBY 4 230.0 1
		87.71	10.85	90.64	8.53	90.7	8.5	620179-620379-620279 RUGBY 4 230/115/13 1
659179 RUGBYNP7	115.0	98.6		99.21		99.25		SYSTEM INTACT
		90.67	7.93	91.44	7.77	91.48	7.77	615903 GRE-BALTA 4230.0 620379 RUGBY 4 230.0 1
		87.79	10.81	90.72	8.5	90.78	8.47	620179-620379-620279 RUGBY 4 230/115/13 1
659261 BTHOLD 7	115.0	94.51		96.08		96.12		SYSTEM INTACT
		92.29	2.22					603022 SOURIS 7 115.0 605634 VELVA TAP 115.0 1
		92.36	2.15					605634 VELVA TAP 115.0 615348 GRE-MCHENRY7115.0 1
				94.59	1.5	94.64	1.48	615347 GRE-MCHENRY4230.0 615900 GRE-COAL TP4230.0 1
		91.54	2.97					615347-615348-615349 GRE-MCHENRY4 230/115/12 1

			94.92	1.16	94.96	1.16	615600 GRE-COAL CR4230.0 620381 UNDERWD4 230.0 1
	92.35	2.16	94.68	1.41	94.72	1.4	615903 GRE-BALTA 4230.0 620379 RUGBY 4 230.0 1
	92.24	2.26	94.93	1.15	94.98	1.14	620179-620379-620279 RUGBY 4 230/115/13 1
					94.98	1.14	620290 HARVEY 4 230.0 620381 UNDERWD4 230.0 1
	89.28	5.22	93.84	2.24	93.9	2.22	659106 LELANDO4 230.0 659108 LOGAN 4 230.0 1
	89.78	4.72					659108-659155-659208 LOGAN 4 230/115/13 1
	90.67	3.83	93.14	2.94	93.18	2.94	659144 BLAISDELL 7115.0 659261 BTHOLD 7 115.0 1
	88.92	5.59	89.92	6.16	89.96	6.16	659155 LOGAN 7 115.0 659307 SWMINOT CP7115.0 1
			94.48	1.61	94.51	1.61	659261 BTHOLD 7 115.0 659307 SWMINOT CP7115.0 1
	92.29	2.22					CONTINGENCY B2.SOR-VEL-MCH
659264 RUGBCPC7 115.0	98.61		99.22		99.26		SYSTEM INTACT
	90.68	7.93	91.45	7.77	91.49	7.77	615903 GRE-BALTA 4230.0 620379 RUGBY 4 230.0 1
	87.81	10.8	90.73	8.49	90.79	8.46	620179-620379-620279 RUGBY 4 230/115/13 1
659307 SWMINOT CP7 115.0	95.33		97.51		97.56		SYSTEM INTACT
	92.26	3.06					603022 SOURIS 7 115.0 605634 VELVA TAP 115.0 1
	92.36	2.96					605634 VELVA TAP 115.0 615348 GRE-MCHENRY7115.0 1
	91.4	3.92					615347-615348-615349 GRE-MCHENRY4 230/115/12 1
	92.35	2.97					615903 GRE-BALTA 4230.0 620379 RUGBY 4 230.0 1
	92.26	3.07					620179-620379-620279 RUGBY 4 230/115/13 1
	89.69	5.64					659106 LELANDO4 230.0 659108 LOGAN 4 230.0 1
	87	8.33					659108-659155-659208 LOGAN 4 230/115/13 1
	85.81	9.52	86.89	10.62	86.93	10.63	659155 LOGAN 7 115.0 659307 SWMINOT CP7115.0 1
	92.25	3.07					CONTINGENCY B2.SOR-VEL-MCH
659308 KENASTON 7 115.0	93.37		94.79		94.82		SYSTEM INTACT
	91.37	2					603022 SOURIS 7 115.0 605634 VELVA TAP 115.0 1
	91.43	1.93					605634 VELVA TAP 115.0 615348 GRE-MCHENRY7115.0 1
			93.33	1.46	93.38	1.44	615347 GRE-MCHENRY4230.0 615900 GRE-COAL TP4230.0 1
	90.68	2.68					615347-615348-615349 GRE-MCHENRY4 230/115/12 1
			93.69	1.1	93.73	1.09	615600 GRE-COAL CR4230.0 620381 UNDERWD4 230.0 1
			93.82	0.97	93.86	0.96	615903 GRE-BALTA 4230.0 620290 HARVEY 4 230.0 1
	91.44	1.92	93.53	1.26	93.56	1.26	615903 GRE-BALTA 4230.0 620379 RUGBY 4 230.0 1
	91.33	2.04	93.76	1.03	93.8	1.03	620179-620379-620279 RUGBY 4 230/115/13 1
					93.76	1.06	620290 HARVEY 4 230.0 620381 UNDERWD4 230.0 1
	88.14	5.22	92.46	2.33	92.52	2.3	659106 LELANDO4 230.0 659108 LOGAN 4 230.0 1
			93.89	0.9			659108 LOGAN 4 230.0 659143 BLAISDELL 4230.0 1
	89.13	4.24					659108-659155-659208 LOGAN 4 230/115/13 1
	90.41	2.96	92.57	2.22	92.61	2.21	659144 BLAISDELL 7115.0 659261 BTHOLD 7 115.0 1
	88.29	5.07	89.16	5.63	89.19	5.63	659155 LOGAN 7 115.0 659307 SWMINOT CP7115.0 1

		91.37	2	93.27	1.52	93.29	1.53	659261 BTHOLD 7 115.0 659307 SWMINOT CP7115.0 1 CONTINGENCY B2.SOR-VEL-MCH
659694 ROLETTE7	115.0	94.11		94.69		94.72		SYSTEM INTACT
		93.01	1.09					603022 SOURIS 7 115.0 603023 MALLARD7 115.0 1
		91.51	2.59					603023 MALLARD7 115.0 659155 LOGAN 7 115.0 1
				94.22	0.46	94.13	0.59	603023 MALLARD7 115.0 659165 RUTHVILLECP7115.0 1
		91.72	2.39	93.69	1	93.73	0.99	615347-615348-615349 GRE-MCHENRY4 230/115/12 1
		92.63	1.47	93.16	1.53	93.19	1.53	615348 GRE-MCHENRY7115.0 659113 VOLTAIR7 115.0 1
		92.55	1.56	93.3	1.38	93.35	1.37	615600 GRE-COAL CR4230.0 620381 UNDERWD4 230.0 1
		92.25	1.86	93.18	1.5	93.24	1.48	615903 GRE-BALTA 4230.0 620290 HARVEY 4 230.0 1
		85.24	8.87	86.01	8.68	86.05	8.67	615903 GRE-BALTA 4230.0 620379 RUGBY 4 230.0 1
		81.54	12.56	84.85	9.84	84.92	9.8	620179-620379-620279 RUGBY 4 230/115/13 1
						93.07	1.65	620290 HARVEY 4 230.0 620381 UNDERWD4 230.0 1
				94.32	0.36			652442 GARRISN7 115.0 652449 MAX 7 115.0 1
				94.16	0.52	94.19	0.53	652464 DENBIGH TAP7115.0 659113 VOLTAIR7 115.0 1
				93.83	0.85	93.89	0.83	659106 LELANDO4 230.0 659108 LOGAN 4 230.0 1
		92.95	1.16					659108-659155-659208 LOGAN 4 230/115/13 1

System Intact and Category B Thermal Results for Monitored Area

MRO 2013 Winter Peak North Transfer Model

CIRCUIT/WINDING TO CKT # NAME # NAME #	SI RATE MVA	CONT RATE MVA	2024 Winter Peak Base Model M700-wp24aa-bus LOADG %I	CURRENT MVA	2024 Winter Peak Option A M701-wp24aa-bus LOADG %I	CURRENT MVA	2024 Winter Peak Option B M702-wp24aa-bus LOADG %I	CURRENT MVA	CONTINGENCY FROM TO CKT
603023 MALLARD7 115.0 603270 WARD CO 115.0 1	100.0	100.0			45.1	45.1	46	45.98	SYSTEM INTACT
					133.4	133.38	135.1	135.14	603023 MALLARD7 115.0 659155 LOGAN 7 115.0 1
					110.9	110.9	112.2	112.25	659108-659155-659208 LOGAN 4 230/115/13 1
603023 MALLARD7 115.0 659155 LOGAN 7 115.0 1	159.3	159.3	81.5	129.79					SYSTEM INTACT
			100.7	160.43					603022 SOURIS 7 115.0 605634 VELVA TAP 115.0 1
			117.7	187.5					603023 MALLARD7 115.0 652440 NELSON 7 115.0 1
			100.5	160.1					605634 VELVA TAP 115.0 615348 GRE-MCHENRY7115.0 1
			103.3	164.52					615347 GRE-MCHENRY4230.0 615900 GRE-COAL TP4230.0 1
			100	159.32					615347-615348-615349 GRE-MCHENRY4 230/115/12 1

			100.3	159.85					615903 GRE-BALTA 4230.0 620379 RUGBY 4 230.0 1
			117.7	187.45					652440 NELSON 7 115.0 652449 MAX 7 115.0 1
			119.5	190.29					652442 GARRISN7 115.0 652449 MAX 7 115.0 1
			100.7	160.46					CONTINGENCY B2.SOR-VEL-MCH
603023 MALLARD7 115.0 659155 LOGAN 7 115.0 1	182.0	182.0			59.4	108.06	59.4	108.06	SYSTEM INTACT
					104.3	189.83	104.3	189.75	602052 WARD CO 230.0 659108 LOGAN 4 230.0 1
603268 MOUSE RIV 115.0 659165 RUTHVILLECP7115.0 1	100.0	100.0			18.9	18.94	18.1	18.07	SYSTEM INTACT
					101.1	101.14	104.4	104.36	603023 MALLARD7 115.0 659165 RUTHVILLECP7115.0 1
605634 VELVA TAP 115.0 615348 GRE-MCHENRY7115.0 1	119.5	119.5	41.1	49.07					SYSTEM INTACT
			102.3	122.26					603022 SOURIS 7 115.0 603023 MALLARD7 115.0 1
			101.4	121.15					603023 MALLARD7 115.0 659155 LOGAN 7 115.0 1
615347 GRE-MCHENRY4230.0 GRE-MCHENRY7 230/115 1	84.0	84.0	114.6	96.28	89.5	75.16	89.3	75.03	SYSTEM INTACT
			160.4	134.72					603022 SOURIS 7 115.0 603023 MALLARD7 115.0 1
			178.7	150.12					603023 MALLARD7 115.0 659155 LOGAN 7 115.0 1
			159.3	133.82	106.5	89.47	106.4	89.37	615347 GRE-MCHENRY4230.0 615903 GRE-BALTA 4230.0 1
			188.2	158.11	129.5	108.79	129.3	108.64	615903 GRE-BALTA 4230.0 620379 RUGBY 4 230.0 1
			154.7	129.97	109.3	91.78	109	91.59	620179-620379-620279 RUGBY 4 230/115/13 1
			145.4	122.12	112.4	94.41	112.2	94.25	652442 GARRISN7 115.0 659113 VOLTAIR7 115.0 1
			157.8	132.54					659106 LELANDO4 230.0 659108 LOGAN 4 230.0 1
			165	138.58					659108-659155-659208 LOGAN 4 230/115/13 1
615348 GRE-MCHENRY7115.0 GRE-MCHENRY4 230/115 1	84.0	84.0	104	87.38	81.1	68.16	81	68.03	SYSTEM INTACT
			145.6	122.35					603022 SOURIS 7 115.0 603023 MALLARD7 115.0 1
			162.3	136.34					603023 MALLARD7 115.0 659155 LOGAN 7 115.0 1
			144.7	121.55					615347 GRE-MCHENRY4230.0 615903 GRE-BALTA 4230.0 1
			171	143.62	117.6	98.75	117.4	98.63	615903 GRE-BALTA 4230.0 620379 RUGBY 4 230.0 1
			140.5	118.01					620179-620379-620279 RUGBY 4 230/115/13 1
			132	110.91	102	85.7	101.8	85.55	652442 GARRISN7 115.0 659113 VOLTAIR7 115.0 1
			143.3	120.35					659106 LELANDO4 230.0 659108 LOGAN 4 230.0 1

			149.8	125.85					659108-659155-659208 LOGAN 4 230/115/13 1
620279 RUGBOTP7 115.0 659264 RUGBCPC7 115.0 1	135.0	135.0			5.7 103.8	7.75 140.06	5.7 103.8	7.67 140.09	SYSTEM INTACT 615903 GRE-BALTA 4230.0 620379 RUGBY 4 230.0 1
652442 GARRISN7 115.0 659113 VOLTAIR7 115.0 1	109.0	109.0	77.2 102.3	84.18 111.56					SYSTEM INTACT 615347 GRE-MCHENRY4230.0 615900 GRE-COAL TP4230.0 1
659108 LOGAN 4 230.0 LOGAN 7 KW1A 1	200.0	200.0	101.4 113 124.6 112.9 116.2 112.9 124.6 125.8 115.9 113	202.89 225.93 249.19 225.77 232.31 225.87 249.21 251.64 231.73 225.95					SYSTEM INTACT 603022 SOURIS 7 115.0 605634 VELVA TAP 115.0 1 603023 MALLARD7 115.0 652440 NELSON 7 115.0 1 605634 VELVA TAP 115.0 615348 GRE- MCHENRY7115.0 1 615347 GRE-MCHENRY4230.0 615900 GRE-COAL TP4230.0 1 615903 GRE-BALTA 4230.0 620379 RUGBY 4 230.0 1 652440 NELSON 7 115.0 652449 MAX 7 115.0 1 652442 GARRISN7 115.0 652449 MAX 7 115.0 1 659108 LOGAN 4 230.0 659143 BLAISDELL 4230.0 1 CONTINGENCY B2.SOR-VEL-MCH
659143 BLAISDELL 4230.0 BLAISDELL 7 BLAISDL KV2 1	166.0	166.0	88.1 130.1 120.8 100.6	146.27 215.94 200.5 167.04	81.3 118	134.92 195.95	81.3 118	134.88 195.89	SYSTEM INTACT 659108-659155-659208 LOGAN 4 230/115/13 1 659155 LOGAN 7 115.0 659307 SWMINOT CP7115.0 1 659261 BTHOLD 7 115.0 659307 SWMINOT CP7115.0 1
659144 BLAISDELL 7115.0 BLAISDELL 4 BLAISDL KV2 1	166.0	166.0	88.1 130.1 120.8 100.6	146.23 215.91 200.46 167.01	81.3 118	134.88 195.91	81.2 118	134.84 195.85	SYSTEM INTACT 659108-659155-659208 LOGAN 4 230/115/13 1 659155 LOGAN 7 115.0 659307 SWMINOT CP7115.0 1 659261 BTHOLD 7 115.0 659307 SWMINOT CP7115.0 1
659155 LOGAN 7 115.0 LOGAN 4 KW1A 1	200.0	200.0	101.4 113 124.6	202.89 225.93 249.19					SYSTEM INTACT 603022 SOURIS 7 115.0 605634 VELVA TAP 115.0 1 603023 MALLARD7 115.0 652440 NELSON 7 115.0 1

			112.9	225.77			605634 VELVA TAP 115.0 615348 GRE-MCHENRY7115.0 1
			116.2	232.31			615347 GRE-MCHENRY4230.0 615900 GRE-COAL TP4230.0 1
			112.9	225.87			615903 GRE-BALTA 4230.0 620379 RUGBY 4 230.0 1
			124.6	249.21			652440 NELSON 7 115.0 652449 MAX 7 115.0 1
			125.8	251.64			652442 GARRISN7 115.0 652449 MAX 7 115.0 1
			115.9	231.73			659108 LOGAN 4 230.0 659143 BLAISDELL 4230.0 1
			113	225.95			CONTINGENCY B2.SOR-VEL-MCH

Prior Outage Thermal Results for Monitored Area

MRO 2013 Winter Peak North Transfer Model

CIRCUIT/WINDING TO # NAME # NAME CKT #	RATE MVA	RATE MVA	2024 Winter Peak Base Model M700-wp24aa-bus LOADG %I	LOADG MVA	2024 Winter Peak Option A M701-wp24aa-bus LOADG %I	LOADG MVA	2024 Winter Peak Option B M702-wp24aa-bus LOADG %I	LOADG MVA	PRIOR OUTAGE APPLIED FROM TO CKT	CONTINGENCY PERFORMED FROM TO CKT
603022 SOURIS 7 115.0 603023 MALLARD7 115.0 1	119.5	119.5	56.2	67.21					SYSTEM INTACT	
			107.7	128.74					605634 VELVA TAP 115.0 615348 GRE-MCHENRY7115.0 1	603023 MALLARD7 115.0 652440 NELSON 7 115.0 1
			107.6	128.53					605634 VELVA TAP 115.0 615348 GRE-MCHENRY7115.0 1	652440 NELSON 7 115.0 652449 MAX 7 115.0 1
			107.8	128.77					605634 VELVA TAP 115.0 615348 GRE-MCHENRY7115.0 1	CONTINGENCY C2.MAL FAULT-5T9 BKR
			101.3	121.03					615347-615348-615349 GRE-MCHENRY4 230/115/12 1	CONTINGENCY B2.SOR-VEL-MCH
			101.3	121.03					615348 GRE-MCHENRY7115.0 659113 VOLTAIR7 115.0 1	603022 SOURIS 7 115.0 605634 VELVA TAP 115.0 1
			101.3	121.03					615348 GRE-MCHENRY7115.0 659113 VOLTAIR7 115.0 1	CONTINGENCY B2.SOR-VEL-MCH
			108	129.07					652440 NELSON 7 115.0 652449 MAX 7 115.0 1	603022 SOURIS 7 115.0 605634 VELVA TAP 115.0 1
			107.6	128.53					652440 NELSON 7 115.0 652449 MAX 7 115.0 1	605634 VELVA TAP 115.0 615348 GRE-MCHENRY7115.0 1
			108	129.09					652440 NELSON 7 115.0 652449 MAX 7 115.0 1	CONTINGENCY B2.SOR-VEL-MCH
603023 MALLARD7 115.0 603270 WARD CO 115.0 1	100.0	100.0			45.2	45.15	44.9	44.86	SYSTEM INTACT	

					189.6	189.63	183.2	183.22	603022 SOURIS 7 115.0 603268 MOUSE RIV 115.0 1	603023 MALLARD7 115.0 659155 LOGAN 7 115.0 1
					162.1	162.06			603022 SOURIS 7 115.0 603270 WARD CO 115.0 1	603022 SOURIS 7 115.0 603270 WARD CO 115.0 2
					189.8	189.77	183.2	183.22	603023 MALLARD7 115.0 659155 LOGAN 7 115.0 1	603022 SOURIS 7 115.0 603268 MOUSE RIV 115.0 1
							156.3	156.27	603023 MALLARD7 115.0 659155 LOGAN 7 115.0 1	603268 MOUSE RIV 115.0 659165 RUTHVILLECP7115.0 1
							156.3	156.27	603268 MOUSE RIV 115.0 659165 RUTHVILLECP7115.0 1	603023 MALLARD7 115.0 659155 LOGAN 7 115.0 1
603023 MALLARD7 115.0 659155 LOGAN 7 115.0 1	159.3	159.3	81.5	129.79					SYSTEM INTACT	
			159.9	254.78					605634 VELVA TAP 115.0 615348 GRE-MCHENRY7115.0 1	603023 MALLARD7 115.0 652440 NELSON 7 115.0 1
			159.7	254.43					605634 VELVA TAP 115.0 615348 GRE-MCHENRY7115.0 1	652440 NELSON 7 115.0 652449 MAX 7 115.0 1
			143.7	228.98					615347-615348-615349 GRE-MCHENRY4 230/115/12 1	603023 MALLARD7 115.0 652440 NELSON 7 115.0 1
			143.7	228.85					615347-615348-615349 GRE-MCHENRY4 230/115/12 1	652440 NELSON 7 115.0 652449 MAX 7 115.0 1
			160.1	255.11					652440 NELSON 7 115.0 652449 MAX 7 115.0 1	603022 SOURIS 7 115.0 605634 VELVA TAP 115.0 1
			159.7	254.44					652440 NELSON 7 115.0 652449 MAX 7 115.0 1	605634 VELVA TAP 115.0 615348 GRE-MCHENRY7115.0 1
			143.7	228.85					652440 NELSON 7 115.0 652449 MAX 7 115.0 1	615347-615348-615349 GRE-MCHENRY4 230/115/12 1
			160.2	255.15					652440 NELSON 7 115.0 652449 MAX 7 115.0 1	CONTINGENCY B2.SOR-VEL-MCH
603023 MALLARD7 115.0 659155 LOGAN 7 115.0 1	182.0	182.0			59.3	107.87	59.1	107.64	SYSTEM INTACT	
					124.8	227.17	124.5	226.65	602052 WARD CO 230.0 615347 GRE-MCHENRY4230.0 1	602052 WARD CO 230.0 659108 LOGAN 4 230.0 1
					125.2	227.8	124.9	227.23	602052 WARD CO 230.0 659108 LOGAN 4 230.0 1	602052 WARD CO 230.0 615347 GRE-MCHENRY4230.0 1
					106.9	194.49	106.9	194.65	602052 WARD CO 230.0 659108 LOGAN 4 230.0 1	603270 WARD CO 115.0 605634 VELVA TAP 115.0 1
							107	194.69	602052 WARD CO 230.0 659108 LOGAN 4 230.0 1	605634 VELVA TAP 115.0 615348 GRE-MCHENRY7115.0 1
					115.9	210.88	116.3	211.6	602052 WARD CO 230.0 659108 LOGAN 4 230.0 1	659155 LOGAN 7 115.0 659307 SWMINOT CP7115.0 1
					110.2	200.52	110.7	201.45	602052 WARD CO 230.0 659108 LOGAN 4 230.0 1	659261 BTHOLD 7 115.0 659307 SWMINOT CP7115.0 1
					106.9	194.5	106.9	194.64	602052 WARD CO 230.0 659108 LOGAN 4 230.0 1	CONTINGENCY B2.SOR-VEL-MCH
					115.9	210.9	116.3	211.63	659155 LOGAN 7 115.0 659307 SWMINOT CP7115.0 1	602052 WARD CO 230.0 659108 LOGAN 4 230.0 1

603023 MALLARD7 115.0 659165 RUTHVILLECP7115.0 1	144.0	144.0			53.1	76.47	51.8	74.53	SYSTEM INTACT	
					160.6	231.28	146.3	210.73	603022 SOURIS 7 115.0 603270 WARD CO 115.0 1	603022 SOURIS 7 115.0 603270 WARD CO 115.0 2
603268 MOUSE RIV 115.0 659165 RUTHVILLECP7115.0 1	100.0	100.0			18.9	18.95	18.5	18.47	SYSTEM INTACT	
					126.4	126.36			603022 SOURIS 7 115.0 603270 WARD CO 115.0 1	603022 SOURIS 7 115.0 603270 WARD CO 115.0 2
							122.7	122.74	603023 MALLARD7 115.0 603270 WARD CO 115.0 1	603023 MALLARD7 115.0 659155 LOGAN 7 115.0 1
							122.7	122.74	603023 MALLARD7 115.0 659155 LOGAN 7 115.0 1	603023 MALLARD7 115.0 603270 WARD CO 115.0 1
605634 VELVA TAP 115.0 615348 GRE-MCHENRY7115.0 1	119.5	119.5	41.1	49.07					SYSTEM INTACT	
			105.8	126.38					603023 MALLARD7 115.0 659155 LOGAN 7 115.0 1	603022 SOURIS 7 115.0 603023 MALLARD7 115.0 1
			109.5	130.82					603023 MALLARD7 115.0 659155 LOGAN 7 115.0 1	652453 TOWNER 7 115.0 652464 DENBIGH TAP7115.0 1
			111	132.63					603023 MALLARD7 115.0 659155 LOGAN 7 115.0 1	652464 DENBIGH TAP7115.0 659113 VOLTAIR7 115.0 1
			103.1	123.21					603023 MALLARD7 115.0 659155 LOGAN 7 115.0 1	659155 LOGAN 7 115.0 659307 SWMINOT CP7115.0 1
			136.5	163.14					615347-615348-615349 GRE-MCHENRY4 230/115/12 1	603022 SOURIS 7 115.0 603023 MALLARD7 115.0 1
			111.1	132.72					652464 DENBIGH TAP7115.0 659113 VOLTAIR7 115.0 1	603023 MALLARD7 115.0 659155 LOGAN 7 115.0 1
			103	123.11					659155 LOGAN 7 115.0 659307 SWMINOT CP7115.0 1	603023 MALLARD7 115.0 659155 LOGAN 7 115.0 1
615347 GRE-MCHENRY4230.0 GRE-MCHENRY7 230/115 1	84.0	84.0	114.6	96.28	89.5	75.17	85.4	71.74	SYSTEM INTACT	
					115.1	96.67	104.4	87.69	602052 WARD CO 230.0 615347 GRE-MCHENRY4230.0 1	602052 WARD CO 230.0 659108 LOGAN 4 230.0 1
					106.9	89.78			602052 WARD CO 230.0 615347 GRE-MCHENRY4230.0 1	603023 MALLARD7 115.0 659155 LOGAN 7 115.0 1
					107.1	89.95			602052 WARD CO 230.0 615347 GRE-MCHENRY4230.0 1	652440 NELSON 7 115.0 652449 MAX 7 115.0 1
					107	89.9			602052 WARD CO 230.0 615347 GRE-MCHENRY4230.0 1	652440 NELSON 7 115.0 659155 LOGAN 7 115.0 1
					114.8	96.47	104.2	87.49	602052 WARD CO 230.0 659108 LOGAN 4 230.0 1	602052 WARD CO 230.0 615347 GRE-MCHENRY4230.0 1
					106.8	89.71			603023 MALLARD7 115.0 659155 LOGAN 7 115.0 1	602052 WARD CO 230.0 615347 GRE-MCHENRY4230.0

									1
			181.2	152.21			603023 MALLARD7 115.0 659155 LOGAN 7 115.0 1	603022 SOURIS 7 115.0 603023 MALLARD7 115.0 1
			175.7	147.63			603023 MALLARD7 115.0 659155 LOGAN 7 115.0 1	620182 BOTNO1 9 41.60 652455 BOTTNO 7 115.0 1
			176.4	148.21			603023 MALLARD7 115.0 659155 LOGAN 7 115.0 1	620183 BOTNO2 9 41.60 652455 BOTTNO 7 115.0 1
			178.7	150.13			603023 MALLARD7 115.0 659155 LOGAN 7 115.0 1	652440 NELSON 7 115.0 659190 NDPRAIRWND 7115.0 1
			182.1	152.97			603023 MALLARD7 115.0 659155 LOGAN 7 115.0 1	659155 LOGAN 7 115.0 659307 SWMINOT CP7115.0 1
			178.7	150.12			603023 MALLARD7 115.0 659155 LOGAN 7 115.0 1	659190 NDPRAIRWND 7115.0 659325 NDPRAIRWND 934.50 1
			180.2	151.35			603023 MALLARD7 115.0 659155 LOGAN 7 115.0 1	659261 BTHOLD 7 115.0 659307 SWMINOT CP7115.0 1
					106.9	89.76	652440 NELSON 7 115.0 652449 MAX 7 115.0 1	602052 WARD CO 230.0 615347 GRE-MCHENRY4230.0 1
					106.8	89.71	652440 NELSON 7 115.0 659155 LOGAN 7 115.0 1	602052 WARD CO 230.0 615347 GRE-MCHENRY4230.0 1
			181.9	152.84			659155 LOGAN 7 115.0 659307 SWMINOT CP7115.0 1	603023 MALLARD7 115.0 659155 LOGAN 7 115.0 1
615348 GRE-MCHENRY7115.0 659113 VOLTAIR7 115.0 1	147.8	147.8	30.5	45.11			SYSTEM INTACT	
			110.3	163.03			615347-615348-615349 GRE- MCHENRY4 230/115/12 1	603022 SOURIS 7 115.0 603023 MALLARD7 115.0 1
615348 GRE-MCHENRY7115.0 GRE-MCHENRY4 230/115 1	84.0	84.0	104	87.38	81.2	68.17	SYSTEM INTACT	
					104.4	87.73	602052 WARD CO 230.0 615347 GRE-MCHENRY4230.0 1	602052 WARD CO 230.0 659108 LOGAN 4 230.0 1
					104.2	87.55	602052 WARD CO 230.0 659108 LOGAN 4 230.0 1	602052 WARD CO 230.0 615347 GRE-MCHENRY4230.0 1
			164.6	138.24			603023 MALLARD7 115.0 659155 LOGAN 7 115.0 1	603022 SOURIS 7 115.0 603023 MALLARD7 115.0 1
			159.6	134.07			603023 MALLARD7 115.0 659155 LOGAN 7 115.0 1	620182 BOTNO1 9 41.60 652455 BOTTNO 7 115.0 1
			160.2	134.59			603023 MALLARD7 115.0 659155 LOGAN 7 115.0 1	620183 BOTNO2 9 41.60 652455 BOTTNO 7 115.0 1
			162.3	136.35			603023 MALLARD7 115.0 659155 LOGAN 7 115.0 1	652440 NELSON 7 115.0 659190 NDPRAIRWND 7115.0

										1
			165.4	138.92					603023 MALLARD7 115.0 659155 LOGAN 7 115.0 1	659155 LOGAN 7 115.0 659307 SWMINOT CP7115.0 1
			162.3	136.34					603023 MALLARD7 115.0 659155 LOGAN 7 115.0 1	659190 NDPRAIRWND 7115.0 659325 NDPRAIRWND 934.50 1
			163.6	137.45					603023 MALLARD7 115.0 659155 LOGAN 7 115.0 1	659261 BTHOLD 7 115.0 659307 SWMINOT CP7115.0 1
			165.2	138.81					659155 LOGAN 7 115.0 659307 SWMINOT CP7115.0 1	603023 MALLARD7 115.0 659155 LOGAN 7 115.0 1
652442 GARRISN7 115.0 659113 VOLTAIR7 115.0 1	109.0	109.0	77.2	84.18	70.7	77.1	70.9	77.32	SYSTEM INTACT	
					110.2	120.13	110.5	120.44	602052 WARD CO 230.0 659108 LOGAN 4 230.0 1	603023 MALLARD7 115.0 659155 LOGAN 7 115.0 1
					110.3	120.21	110.5	120.44	603023 MALLARD7 115.0 659155 LOGAN 7 115.0 1	602052 WARD CO 230.0 659108 LOGAN 4 230.0 1
			152.3	165.97					615347-615348-615349 GRE- MCHENRY4 230/115/12 1	603022 SOURIS 7 115.0 603023 MALLARD7 115.0 1
			115.1	125.49					615347-615348-615349 GRE- MCHENRY4 230/115/12 1	603023 MALLARD7 115.0 652440 NELSON 7 115.0 1
			115.1	125.42					615347-615348-615349 GRE- MCHENRY4 230/115/12 1	652440 NELSON 7 115.0 652449 MAX 7 115.0 1
			105.2	114.65					652440 NELSON 7 115.0 652449 MAX 7 115.0 1	603022 SOURIS 7 115.0 603023 MALLARD7 115.0 1
			115.1	125.42					652440 NELSON 7 115.0 652449 MAX 7 115.0 1	615347-615348-615349 GRE- MCHENRY4 230/115/12 1
652452 RUGBY 7 115.0 652453 TOWNER 7 115.0 1	117.0	117.0	25.9	30.34					SYSTEM INTACT	
			103.6	121.21					615347-615348-615349 GRE- MCHENRY4 230/115/12 1	603022 SOURIS 7 115.0 603023 MALLARD7 115.0 1
659108 LOGAN 4 230.0 LOGAN 7 KW1A 1	200.0	200.0	101.4	202.89	53.7	107.33	53.6	107.27	SYSTEM INTACT	
					104.1	208.12	104.2	208.47	602052 WARD CO 230.0 615347 GRE-MCHENRY4230.0 1	602052 WARD CO 230.0 659108 LOGAN 4 230.0 1
					104.3	208.53	104.4	208.84	602052 WARD CO 230.0 659108 LOGAN 4 230.0 1	602052 WARD CO 230.0 615347 GRE-MCHENRY4230.0 1
					110	220.08	110.7	221.5	602052 WARD CO 230.0 659108 LOGAN 4 230.0 1	652440 NELSON 7 115.0 652449 MAX 7 115.0 1
					110	220.03	110.7	221.43	602052 WARD CO 230.0 659108 LOGAN 4 230.0 1	652440 NELSON 7 115.0 659155 LOGAN 7 115.0 1
			151.2	302.31					605634 VELVA TAP 115.0 615348 GRE-MCHENRY7115.0 1	603023 MALLARD7 115.0 652440 NELSON 7 115.0 1

			151.1	302.11					605634 VELVA TAP 115.0 615348 GRE-MCHENRY7115.0 1	652440 NELSON 7 115.0 652449 MAX 7 115.0 1
			140.7	281.33					615347-615348-615349 GRE-MCHENRY4 230/115/12 1	603023 MALLARD7 115.0 652440 NELSON 7 115.0 1
			140.6	281.29					615347-615348-615349 GRE-MCHENRY4 230/115/12 1	652440 NELSON 7 115.0 652449 MAX 7 115.0 1
			151.3	302.58					652440 NELSON 7 115.0 652449 MAX 7 115.0 1	603022 SOURIS 7 115.0 605634 VELVA TAP 115.0 1 605634 VELVA TAP 115.0 615348 GRE-MCHENRY7115.0 1
			151.1	302.11					652440 NELSON 7 115.0 652449 MAX 7 115.0 1	
			140.6	281.3					652440 NELSON 7 115.0 652449 MAX 7 115.0 1	615347-615348-615349 GRE-MCHENRY4 230/115/12 1
			151.3	302.61					652440 NELSON 7 115.0 652449 MAX 7 115.0 1	CONTINGENCY B2.SOR-VEL-MCH
					109.9	219.78	110.6	221.19	652440 NELSON 7 115.0 659155 LOGAN 7 115.0 1	602052 WARD CO 230.0 659108 LOGAN 4 230.0 1

Prior Outage Voltage Results for Monitored Area

MRO 2013 Winter Peak North Transfer Model	2024 Winter Peak Base Model	2024 Winter Peak Option A	2024 Winter Peak Option B
	prior-m700-wp24aa-bus	prior-m701-wp24aa-bus	prior-m701a-wp24aa-bus

SUBSTATION # NAME	KV	VOLTAGE %	DROP %	VOLTAGE %	DROP %	VOLTAGE %	DROP %	PRIOR OUTAGE APPLIED FROM TO CKT	CONTINGENCY PERFORMED FROM TO CKT
603022 SOURIS 7	115.0	94.58		98.05		101.39		SYSTEM INTACT	
				83.8	14.25			603022 SOURIS 7 115.0 603270 WARD CO 115.0 1	603022 SOURIS 7 115.0 603270 WARD CO 115.0 2
		81.15	13.43					603023 MALLARD7 115.0 659155 LOGAN 7 115.0 1	620183 BOTNO2 9 41.60 652455 BOTTNO 7 115.0 1
		80.66	13.92					603023 MALLARD7 115.0 659155 LOGAN 7 115.0 1	652440 NELSON 7 115.0 659190 NDPRAIRWND 7115.0 1
		80.17	14.4					603023 MALLARD7 115.0 659155 LOGAN 7 115.0 1	652453 TOWNER 7 115.0 652464 DENBIGH TAP7115.0 1
		79.82	14.76					603023 MALLARD7 115.0 659155 LOGAN 7 115.0 1	652464 DENBIGH TAP7115.0 659113 VOLTAIR7 115.0 1

		79.84	14.74					603023 MALLARD7 115.0 659155 LOGAN 7 115.0 1	659155 LOGAN 7 115.0 659307 SWMINOT CP7115.0 1
		80.66	13.91					603023 MALLARD7 115.0 659155 LOGAN 7 115.0 1	659190 NDPRAIRWND 7115.0 659325 NDPRAIRWND 934.50 1
		80.29	14.29					603023 MALLARD7 115.0 659155 LOGAN 7 115.0 1	659261 BTHOLD 7 115.0 659307 SWMINOT CP7115.0 1
		34.57	60					615347-615348-615349 GRE-MCHENRY4 230/115/12 1	603022 SOURIS 7 115.0 603023 MALLARD7 115.0 1
		79.78	14.8					652464 DENBIGH TAP7115.0 659113 VOLTAIR7 115.0 1	603023 MALLARD7 115.0 659155 LOGAN 7 115.0 1
		79.88	14.7					659155 LOGAN 7 115.0 659307 SWMINOT CP7115.0 1	603023 MALLARD7 115.0 659155 LOGAN 7 115.0 1
603023 MALLARD7	115.0	94.86		98.25				SYSTEM INTACT	
				91.57	6.68			603023 MALLARD7 115.0 603270 WARD CO 115.0 1	603023 MALLARD7 115.0 659155 LOGAN 7 115.0 1
		74.69	20.17					603023 MALLARD7 115.0 659155 LOGAN 7 115.0 1	603022 SOURIS 7 115.0 603023 MALLARD7 115.0 1
				91.58	6.68			603023 MALLARD7 115.0 659155 LOGAN 7 115.0 1	603023 MALLARD7 115.0 603270 WARD CO 115.0 1
		79.75	15.11					603023 MALLARD7 115.0 659155 LOGAN 7 115.0 1	652453 TOWNER 7 115.0 652464 DENBIGH TAP7115.0 1
		79.38	15.48					603023 MALLARD7 115.0 659155 LOGAN 7 115.0 1	652464 DENBIGH TAP7115.0 659113 VOLTAIR7 115.0 1
		79.33	15.53					603023 MALLARD7 115.0 659155 LOGAN 7 115.0 1	659155 LOGAN 7 115.0 659307 SWMINOT CP7115.0 1
		79.79	15.07					603023 MALLARD7 115.0 659155 LOGAN 7 115.0 1	659261 BTHOLD 7 115.0 659307 SWMINOT CP7115.0 1
		79.34	15.52					652464 DENBIGH TAP7115.0 659113 VOLTAIR7 115.0 1	603023 MALLARD7 115.0 659155 LOGAN 7 115.0 1
		79.37	15.49					659155 LOGAN 7 115.0 659307 SWMINOT CP7115.0 1	603023 MALLARD7 115.0 659155 LOGAN 7 115.0 1
603268 MOUSE RIV	115.0			97.59		101.03		SYSTEM INTACT	
				84.15	13.44			603022 SOURIS 7 115.0 603270 WARD CO 115.0 1	603022 SOURIS 7 115.0 603270 WARD CO 115.0 2
605634 VELVA TAP	115.0	98.88		100.33				SYSTEM INTACT	
		82.3	16.59					605634 VELVA TAP 115.0 615348 GRE-MCHENRY7115.0 1	603023 MALLARD7 115.0 652440 NELSON 7 115.0 1
		82.43	16.45					605634 VELVA TAP 115.0 615348 GRE-MCHENRY7115.0 1	652440 NELSON 7 115.0 652449 MAX 7 115.0 1

		49.31	49.57					615347-615348-615349 GRE-MCHENRY4 230/115/12 1	603022 SOURIS 7 115.0 603023 MALLARD7 115.0 1
		84.48	14.4					615347-615348-615349 GRE-MCHENRY4 230/115/12 1	603023 MALLARD7 115.0 652440 NELSON 7 115.0 1
				91.04	9.29			615347-615348-615349 GRE-MCHENRY4 230/115/12 1	603270 WARD CO 115.0 605634 VELVA TAP 115.0 1
		84.51	14.38					615347-615348-615349 GRE-MCHENRY4 230/115/12 1	652440 NELSON 7 115.0 652449 MAX 7 115.0 1
		86.42	12.46					615347-615348-615349 GRE-MCHENRY4 230/115/12 1	652453 TOWNER 7 115.0 652464 DENBIGH TAP7115.0 1
		82.43	16.46					652440 NELSON 7 115.0 652449 MAX 7 115.0 1	605634 VELVA TAP 115.0 615348 GRE-MCHENRY7115.0 1
		84.5	14.38					652440 NELSON 7 115.0 652449 MAX 7 115.0 1	615347-615348-615349 GRE-MCHENRY4 230/115/12 1
615348 GRE-MCHENRY7	115.0	100.08		101.05		102.79		SYSTEM INTACT	
				90.96	10.09	91.94	10.84	605634 VELVA TAP 115.0 615348 GRE-MCHENRY7115.0 1	615347-615348-615349 GRE-MCHENRY4 230/115/12 1
		54.16	45.92					615347-615348-615349 GRE-MCHENRY4 230/115/12 1	603022 SOURIS 7 115.0 603023 MALLARD7 115.0 1
		84.87	15.21					615347-615348-615349 GRE-MCHENRY4 230/115/12 1	603023 MALLARD7 115.0 652440 NELSON 7 115.0 1
				91.03	10.02			615347-615348-615349 GRE-MCHENRY4 230/115/12 1	603270 WARD CO 115.0 605634 VELVA TAP 115.0 1
				90.97	10.08	91.94	10.84	615347-615348-615349 GRE-MCHENRY4 230/115/12 1	605634 VELVA TAP 115.0 615348 GRE-MCHENRY7115.0 1
		87.79	12.3					615347-615348-615349 GRE-MCHENRY4 230/115/12 1	615348 GRE-MCHENRY7115.0 659113 VOLTAIR7 115.0 1
		84.88	15.2					615347-615348-615349 GRE-MCHENRY4 230/115/12 1	652440 NELSON 7 115.0 652449 MAX 7 115.0 1
		86.21	13.87					615347-615348-615349 GRE-MCHENRY4 230/115/12 1	652453 TOWNER 7 115.0 652464 DENBIGH TAP7115.0 1
		86.47	13.61					615347-615348-615349 GRE-MCHENRY4 230/115/12 1	652464 DENBIGH TAP7115.0 659113 VOLTAIR7 115.0 1
				90.95	10.1	91.93	10.86	615347-615348-615349 GRE-MCHENRY4 230/115/12 1	CONTINGENCY B2.SOR-VEL-MCH
		87.79	12.3					615348 GRE-MCHENRY7115.0 659113 VOLTAIR7 115.0 1	615347-615348-615349 GRE-MCHENRY4 230/115/12 1
		84.88	15.2					652440 NELSON 7 115.0 652449 MAX 7 115.0 1	615347-615348-615349 GRE-MCHENRY4 230/115/12 1
		86.47	13.61					652464 DENBIGH TAP7115.0 659113 VOLTAIR7 115.0 1	615347-615348-615349 GRE-MCHENRY4 230/115/12 1

652440 NELSON 7	115.0	95.05		98.53		SYSTEM INTACT	
		76.78	18.27			603023 MALLARD7 115.0 659155 LOGAN 7 115.0 1	603022 SOURIS 7 115.0 603023 MALLARD7 115.0 1
		80.95	14.11			603023 MALLARD7 115.0 659155 LOGAN 7 115.0 1	652453 TOWNER 7 115.0 652464 DENBIGH TAP7115.0 1
		80.63	14.42			603023 MALLARD7 115.0 659155 LOGAN 7 115.0 1	652464 DENBIGH TAP7115.0 659113 VOLTAIR7 115.0 1
		80.46	14.59			603023 MALLARD7 115.0 659155 LOGAN 7 115.0 1	659155 LOGAN 7 115.0 659307 SWMINOT CP7115.0 1
		80.92	14.13			603023 MALLARD7 115.0 659155 LOGAN 7 115.0 1	659261 BTHOLD 7 115.0 659307 SWMINOT CP7115.0 1
		80.59	14.47			652464 DENBIGH TAP7115.0 659113 VOLTAIR7 115.0 1	603023 MALLARD7 115.0 659155 LOGAN 7 115.0 1
		80.5	14.55			659155 LOGAN 7 115.0 659307 SWMINOT CP7115.0 1	603023 MALLARD7 115.0 659155 LOGAN 7 115.0 1
652449 MAX 7	115.0	96.63				SYSTEM INTACT	
		84.84	11.79			603023 MALLARD7 115.0 659155 LOGAN 7 115.0 1	603022 SOURIS 7 115.0 603023 MALLARD7 115.0 1
		87.17	9.46			603023 MALLARD7 115.0 659155 LOGAN 7 115.0 1	652440 NELSON 7 115.0 659190 NDPRAIRWND 7115.0 1
		87.01	9.62			603023 MALLARD7 115.0 659155 LOGAN 7 115.0 1	652453 TOWNER 7 115.0 652464 DENBIGH TAP7115.0 1
		86.82	9.81			603023 MALLARD7 115.0 659155 LOGAN 7 115.0 1	652464 DENBIGH TAP7115.0 659113 VOLTAIR7 115.0 1
		86.4	10.23			603023 MALLARD7 115.0 659155 LOGAN 7 115.0 1	659155 LOGAN 7 115.0 659307 SWMINOT CP7115.0 1
		86.84	9.79			603023 MALLARD7 115.0 659155 LOGAN 7 115.0 1	659261 BTHOLD 7 115.0 659307 SWMINOT CP7115.0 1
		86.79	9.84			652464 DENBIGH TAP7115.0 659113 VOLTAIR7 115.0 1	603023 MALLARD7 115.0 659155 LOGAN 7 115.0 1
		86.44	10.2			659155 LOGAN 7 115.0 659307 SWMINOT CP7115.0 1	603023 MALLARD7 115.0 659155 LOGAN 7 115.0 1
652452 RUGBY 7	115.0	98.61				SYSTEM INTACT	
		94.79	3.82			603023 MALLARD7 115.0 659155 LOGAN 7 115.0 1	603022 SOURIS 7 115.0 603023 MALLARD7 115.0 1
		90.27	8.35			615347-615348-615349 GRE-MCHENRY4 230/115/12 1	603022 SOURIS 7 115.0 603023 MALLARD7 115.0 1
		94.87	3.74			615347-615348-615349 GRE-MCHENRY4 230/115/12 1	603023 MALLARD7 115.0 652440 NELSON 7 115.0 1

		94.89	3.73			615347-615348-615349 GRE-MCHENRY4 230/115/12 1	652440 NELSON 7 115.0 652449 MAX 7 115.0 1
		94.89	3.73			652440 NELSON 7 115.0 652449 MAX 7 115.0 1	615347-615348-615349 GRE-MCHENRY4 230/115/12 1
652453 TOWNER 7	115.0	98.15				SYSTEM INTACT	
		91.11	7.05			603023 MALLARD7 115.0 659155 LOGAN 7 115.0 1	615348 GRE-MCHENRY7115.0 659113 VOLTAIR7 115.0 1
		73.57	24.59			615347-615348-615349 GRE-MCHENRY4 230/115/12 1	603022 SOURIS 7 115.0 603023 MALLARD7 115.0 1
		89.61	8.54			615347-615348-615349 GRE-MCHENRY4 230/115/12 1	603023 MALLARD7 115.0 652440 NELSON 7 115.0 1
		89.63	8.53			615347-615348-615349 GRE-MCHENRY4 230/115/12 1	652440 NELSON 7 115.0 652449 MAX 7 115.0 1
		91.82	6.33			615347-615348-615349 GRE-MCHENRY4 230/115/12 1	652440 NELSON 7 115.0 659190 NDPRAIRWND 7115.0 1
		91.82	6.33			615347-615348-615349 GRE-MCHENRY4 230/115/12 1	659190 NDPRAIRWND 7115.0 659325 NDPRAIRWND 934.50 1
		91.81	6.34			615347-615348-615349 GRE-MCHENRY4 230/115/12 1	659261 BTHOLD 7 115.0 659307 SWMINOT CP7115.0 1
		91.11	7.05			615348 GRE-MCHENRY7115.0 659113 VOLTAIR7 115.0 1	603023 MALLARD7 115.0 659155 LOGAN 7 115.0 1
		89.63	8.53			652440 NELSON 7 115.0 652449 MAX 7 115.0 1	615347-615348-615349 GRE-MCHENRY4 230/115/12 1
652455 BOTTNO 7	115.0	94.8		95.57		97.12	SYSTEM INTACT
		87.39	7.41				603023 MALLARD7 115.0 659155 LOGAN 7 115.0 1 / 615348 GRE-MCHENRY7115.0 659113 VOLTAIR7 115.0 1
				89.88	5.69		603023 MALLARD7 115.0 659165 RUTHVILLECP7115.0 1 / 615348 GRE-MCHENRY7115.0 659113 VOLTAIR7 115.0 1
		68.58	26.22				615347-615348-615349 GRE-MCHENRY4 230/115/12 1 / 603022 SOURIS 7 115.0 603023 MALLARD7 115.0 1
		85.82	8.98				615347-615348-615349 GRE-MCHENRY4 230/115/12 1 / 603023 MALLARD7 115.0 652440 NELSON 7 115.0 1
		85.83	8.97				615347-615348-615349 GRE-MCHENRY4 230/115/12 1 / 652440 NELSON 7 115.0 652449 MAX 7 115.0 1
		88.15	6.65				615347-615348-615349 GRE-MCHENRY4 230/115/12 1 / 652440 NELSON 7 115.0 659190 NDPRAIRWND 7115.0 1
		88.15	6.65				615347-615348-615349 GRE-MCHENRY4 230/115/12 1 / 659190 NDPRAIRWND 7115.0 659325 NDPRAIRWND 934.50 1
		88.14	6.66				615347-615348-615349 GRE-MCHENRY4 230/115/12 1 / 659261 BTHOLD 7 115.0 659307 SWMINOT CP7115.0 1

		87.4	7.4					615348 GRE-MCHENRY7115.0 659113 VOLTAIR7 115.0 1	603023 MALLARD7 115.0 659155 LOGAN 7 115.0 1
				89.86	5.71			615348 GRE-MCHENRY7115.0 659113 VOLTAIR7 115.0 1	603023 MALLARD7 115.0 659165 RUTHVILLECP7115.0 1
				89.61	5.96	90.7	6.42	615348 GRE-MCHENRY7115.0 659113 VOLTAIR7 115.0 1	652440 NELSON 7 115.0 652449 MAX 7 115.0 1
				89.63	5.94	90.73	6.39	615348 GRE-MCHENRY7115.0 659113 VOLTAIR7 115.0 1	652440 NELSON 7 115.0 659155 LOGAN 7 115.0 1
		85.83	8.97					652440 NELSON 7 115.0 652449 MAX 7 115.0 1	615347-615348-615349 GRE-MCHENRY4 230/115/12 1
				89.63	5.94	90.71	6.41	652440 NELSON 7 115.0 652449 MAX 7 115.0 1	615348 GRE-MCHENRY7115.0 659113 VOLTAIR7 115.0 1
				89.66	5.91	90.73	6.39	652440 NELSON 7 115.0 659155 LOGAN 7 115.0 1	615348 GRE-MCHENRY7115.0 659113 VOLTAIR7 115.0 1
652464 DENBIGH TAP7	115.0	98.3		99.06		100.57		SYSTEM INTACT	
		90.61	7.69					603023 MALLARD7 115.0 659155 LOGAN 7 115.0 1	615348 GRE-MCHENRY7115.0 659113 VOLTAIR7 115.0 1
		71.2	27.1					615347-615348-615349 GRE-MCHENRY4 230/115/12 1	603022 SOURIS 7 115.0 603023 MALLARD7 115.0 1
		88.99	9.31					615347-615348-615349 GRE-MCHENRY4 230/115/12 1	603023 MALLARD7 115.0 652440 NELSON 7 115.0 1
		89.01	9.29					615347-615348-615349 GRE-MCHENRY4 230/115/12 1	652440 NELSON 7 115.0 652449 MAX 7 115.0 1
		85.88	12.42					615347-615348-615349 GRE-MCHENRY4 230/115/12 1	652453 TOWNER 7 115.0 652464 DENBIGH TAP7115.0 1
		91.35	6.95					615347-615348-615349 GRE-MCHENRY4 230/115/12 1	659261 BTHOLD 7 115.0 659307 SWMINOT CP7115.0 1
		90.61	7.69					615348 GRE-MCHENRY7115.0 659113 VOLTAIR7 115.0 1	603023 MALLARD7 115.0 659155 LOGAN 7 115.0 1
		88.1	10.2	89.15	9.91	89.64	10.94	615348 GRE-MCHENRY7115.0 659113 VOLTAIR7 115.0 1	652453 TOWNER 7 115.0 652464 DENBIGH TAP7115.0 1
		89.01	9.29					652440 NELSON 7 115.0 652449 MAX 7 115.0 1	615347-615348-615349 GRE-MCHENRY4 230/115/12 1
659108 LOGAN 4	230.0	96.66						SYSTEM INTACT	
		90.08	6.58					605634 VELVA TAP 115.0 615348 GRE-MCHENRY7115.0 1	603023 MALLARD7 115.0 652440 NELSON 7 115.0 1
		90.13	6.53					605634 VELVA TAP 115.0 615348 GRE-MCHENRY7115.0 1	652440 NELSON 7 115.0 652449 MAX 7 115.0 1
		90.78	5.88					615347-615348-615349 GRE-MCHENRY4 230/115/12 1	603023 MALLARD7 115.0 652440 NELSON 7 115.0 1

		90.8	5.86						615347-615348-615349 GRE-MCHENRY4 230/115/12 1	652440 NELSON 7 115.0 652449 MAX 7 115.0 1
		90.02	6.64						652440 NELSON 7 115.0 652449 MAX 7 115.0 1	603022 SOURIS 7 115.0 605634 VELVA TAP 115.0 1
		90.13	6.53						652440 NELSON 7 115.0 652449 MAX 7 115.0 1	605634 VELVA TAP 115.0 615348 GRE-MCHENRY7115.0 1
		90.8	5.86						652440 NELSON 7 115.0 652449 MAX 7 115.0 1	615347-615348-615349 GRE-MCHENRY4 230/115/12 1
		90.01	6.65						652440 NELSON 7 115.0 652449 MAX 7 115.0 1	CONTINGENCY B2.SOR-VEL-MCH
659113 VOLTAIR7	115.0	100.03		101		102.73			SYSTEM INTACT	
		87.68	12.35						603023 MALLARD7 115.0 659155 LOGAN 7 115.0 1	615348 GRE-MCHENRY7115.0 659113 VOLTAIR7 115.0 1
		54.31	45.72						615347-615348-615349 GRE-MCHENRY4 230/115/12 1	603022 SOURIS 7 115.0 603023 MALLARD7 115.0 1
		84.88	15.15						615347-615348-615349 GRE-MCHENRY4 230/115/12 1	603023 MALLARD7 115.0 652440 NELSON 7 115.0 1
		84.9	15.14						615347-615348-615349 GRE-MCHENRY4 230/115/12 1	652440 NELSON 7 115.0 652449 MAX 7 115.0 1
		86.2	13.83						615347-615348-615349 GRE-MCHENRY4 230/115/12 1	652453 TOWNER 7 115.0 652464 DENBIGH TAP7115.0 1
		86.46	13.57						615347-615348-615349 GRE-MCHENRY4 230/115/12 1	652464 DENBIGH TAP7115.0 659113 VOLTAIR7 115.0 1
		84.83	15.21						615347-615348-615349 GRE-MCHENRY4 230/115/12 1	CONTINGENCY C2.MAL FAULT-5T9 BKR
		87.68	12.35						615348 GRE-MCHENRY7115.0 659113 VOLTAIR7 115.0 1	603023 MALLARD7 115.0 659155 LOGAN 7 115.0 1
				90.24	10.76	91.04	11.69		615348 GRE-MCHENRY7115.0 659113 VOLTAIR7 115.0 1	652440 NELSON 7 115.0 652449 MAX 7 115.0 1
				90.29	10.71	91.09	11.64		615348 GRE-MCHENRY7115.0 659113 VOLTAIR7 115.0 1	652440 NELSON 7 115.0 659155 LOGAN 7 115.0 1
				89.44	11.56	89.93	12.81		615348 GRE-MCHENRY7115.0 659113 VOLTAIR7 115.0 1	652453 TOWNER 7 115.0 652464 DENBIGH TAP7115.0 1
				90.11	10.89	90.58	12.15		615348 GRE-MCHENRY7115.0 659113 VOLTAIR7 115.0 1	652464 DENBIGH TAP7115.0 659113 VOLTAIR7 115.0 1
		84.9	15.14						652440 NELSON 7 115.0 652449 MAX 7 115.0 1	615347-615348-615349 GRE-MCHENRY4 230/115/12 1
				90.25	10.75	91.05	11.69		652440 NELSON 7 115.0 652449 MAX 7 115.0 1	615348 GRE-MCHENRY7115.0 659113 VOLTAIR7 115.0 1
				90.31	10.69	91.1	11.63		652440 NELSON 7 115.0 659155 LOGAN 7 115.0 1	615348 GRE-MCHENRY7115.0 659113 VOLTAIR7 115.0 1

		86.46	13.57					652464 DENBIGH TAP7115.0 659113 VOLTAIR7 115.0 1	615347-615348-615349 GRE-MCHENRY4 230/115/12 1
				90.12	10.89	90.59	12.14	652464 DENBIGH TAP7115.0 659113 VOLTAIR7 115.0 1	615348 GRE-MCHENRY7115.0 659113 VOLTAIR7 115.0 1
659143 BLAISDELL 4	230.0	96.82						SYSTEM INTACT	
		92.43	4.39					605634 VELVA TAP 115.0 615348 GRE-MCHENRY7115.0 1	603023 MALLARD7 115.0 652440 NELSON 7 115.0 1
		92.46	4.36					605634 VELVA TAP 115.0 615348 GRE-MCHENRY7115.0 1	652440 NELSON 7 115.0 652449 MAX 7 115.0 1
		92.79	4.03					615347-615348-615349 GRE-MCHENRY4 230/115/12 1	603023 MALLARD7 115.0 652440 NELSON 7 115.0 1
		92.8	4.02					615347-615348-615349 GRE-MCHENRY4 230/115/12 1	652440 NELSON 7 115.0 652449 MAX 7 115.0 1
		92.38	4.44					652440 NELSON 7 115.0 652449 MAX 7 115.0 1	603022 SOURIS 7 115.0 605634 VELVA TAP 115.0 1
		92.46	4.36					652440 NELSON 7 115.0 652449 MAX 7 115.0 1	605634 VELVA TAP 115.0 615348 GRE-MCHENRY7115.0 1
		92.8	4.02					652440 NELSON 7 115.0 652449 MAX 7 115.0 1	615347-615348-615349 GRE-MCHENRY4 230/115/12 1
		92.38	4.45					652440 NELSON 7 115.0 652449 MAX 7 115.0 1	CONTINGENCY B2.SOR-VEL-MCH
659144 BLAISDELL 7	115.0	95.71		97.13		98.48		SYSTEM INTACT	
				92.04	5.09	93.45	5.03	602052 WARD CO 230.0 615347 GRE-MCHENRY4230.0 1	659155 LOGAN 7 115.0 659307 SWMINOT CP7115.0 1
						93.42	5.06	602052 WARD CO 230.0 659108 LOGAN 4 230.0 1	659155 LOGAN 7 115.0 659307 SWMINOT CP7115.0 1
				92.26	4.87	93.55	4.92	603023 MALLARD7 115.0 659165 RUTHVILLECP7115.0 1	659155 LOGAN 7 115.0 659307 SWMINOT CP7115.0 1
		89.72	5.99			93.58	4.9	615347-615348-615349 GRE-MCHENRY4 230/115/12 1	659155 LOGAN 7 115.0 659307 SWMINOT CP7115.0 1
		90.4	5.31					652440 NELSON 7 115.0 652449 MAX 7 115.0 1	603022 SOURIS 7 115.0 605634 VELVA TAP 115.0 1
				92.34	4.79			652440 NELSON 7 115.0 652449 MAX 7 115.0 1	659155 LOGAN 7 115.0 659307 SWMINOT CP7115.0 1
		90.39	5.32					652440 NELSON 7 115.0 652449 MAX 7 115.0 1	CONTINGENCY B2.SOR-VEL-MCH
				92.36	4.77			652440 NELSON 7 115.0 659155 LOGAN 7 115.0 1	659155 LOGAN 7 115.0 659307 SWMINOT CP7115.0 1
				92.05	5.08	93.46	5.02	659155 LOGAN 7 115.0 659307 SWMINOT CP7115.0 1	602052 WARD CO 230.0 615347 GRE-MCHENRY4230.0 1

						93.42	5.05	659155 LOGAN 7 115.0 659307 SWMINOT CP7115.0 1	602052 WARD CO 230.0 659108 LOGAN 4 230.0 1
		90.26	5.45					659155 LOGAN 7 115.0 659307 SWMINOT CP7115.0 1	603022 SOURIS 7 115.0 605634 VELVA TAP 115.0 1
				92.26	4.87	93.55	4.92	659155 LOGAN 7 115.0 659307 SWMINOT CP7115.0 1	603023 MALLARD7 115.0 659165 RUTHVILLECP7115.0 1
		90.31	5.4					659155 LOGAN 7 115.0 659307 SWMINOT CP7115.0 1	605634 VELVA TAP 115.0 615348 GRE-MCHENRY7115.0 1
		89.75	5.96					659155 LOGAN 7 115.0 659307 SWMINOT CP7115.0 1	615347-615348-615349 GRE-MCHENRY4 230/115/12 1
		90.46	5.24	92.35	4.78			659155 LOGAN 7 115.0 659307 SWMINOT CP7115.0 1	652440 NELSON 7 115.0 652449 MAX 7 115.0 1
				92.36	4.77			659155 LOGAN 7 115.0 659307 SWMINOT CP7115.0 1	652440 NELSON 7 115.0 659155 LOGAN 7 115.0 1
		90.26	5.45					659155 LOGAN 7 115.0 659307 SWMINOT CP7115.0 1	CONTINGENCY B2.SOR-VEL-MCH
659150 WHITBY -CP7	115.0	90.78		95.6		99.79		SYSTEM INTACT	
				85.93	9.67			603022 SOURIS 7 115.0 603270 WARD CO 115.0 1	603022 SOURIS 7 115.0 603270 WARD CO 115.0 2
		64.8	25.98					603023 MALLARD7 115.0 659155 LOGAN 7 115.0 1	603022 SOURIS 7 115.0 603023 MALLARD7 115.0 1
		71.57	19.22					603023 MALLARD7 115.0 659155 LOGAN 7 115.0 1	652453 TOWNER 7 115.0 652464 DENBIGH TAP7115.0 1
		71.08	19.7					603023 MALLARD7 115.0 659155 LOGAN 7 115.0 1	652464 DENBIGH TAP7115.0 659113 VOLTAIR7 115.0 1
		71.01	19.78					603023 MALLARD7 115.0 659155 LOGAN 7 115.0 1	659155 LOGAN 7 115.0 659307 SWMINOT CP7115.0 1
		71.63	19.15					603023 MALLARD7 115.0 659155 LOGAN 7 115.0 1	659261 BTHOLD 7 115.0 659307 SWMINOT CP7115.0 1
		71.01	19.77					652464 DENBIGH TAP7115.0 659113 VOLTAIR7 115.0 1	603023 MALLARD7 115.0 659155 LOGAN 7 115.0 1
		71.06	19.72					659155 LOGAN 7 115.0 659307 SWMINOT CP7115.0 1	603023 MALLARD7 115.0 659155 LOGAN 7 115.0 1
659151 BOTTNOJCTCP7	115.0	94.85		95.62		97.17		SYSTEM INTACT	
		87.45	7.4					603023 MALLARD7 115.0 659155 LOGAN 7 115.0 1	615348 GRE-MCHENRY7115.0 659113 VOLTAIR7 115.0 1
				89.93	5.69			603023 MALLARD7 115.0 659165 RUTHVILLECP7115.0 1	615348 GRE-MCHENRY7115.0 659113 VOLTAIR7 115.0 1
		68.66	26.19					615347-615348-615349 GRE-MCHENRY4 230/115/12 1	603022 SOURIS 7 115.0 603023 MALLARD7 115.0 1

		85.87	8.98					615347-615348-615349 GRE-MCHENRY4 230/115/12 1	603023 MALLARD7 115.0 652440 NELSON 7 115.0 1
		85.89	8.96					615347-615348-615349 GRE-MCHENRY4 230/115/12 1	652440 NELSON 7 115.0 652449 MAX 7 115.0 1
		88.2	6.65					615347-615348-615349 GRE-MCHENRY4 230/115/12 1	652440 NELSON 7 115.0 659190 NDPRAIRWND 7115.0 1
		88.2	6.64					615347-615348-615349 GRE-MCHENRY4 230/115/12 1	659190 NDPRAIRWND 7115.0 659325 NDPRAIRWND 934.50 1
		88.19	6.66					615347-615348-615349 GRE-MCHENRY4 230/115/12 1	659261 BTHOLD 7 115.0 659307 SWMINOT CP7115.0 1
		87.45	7.4					615348 GRE-MCHENRY7115.0 659113 VOLTAIR7 115.0 1	603023 MALLARD7 115.0 659155 LOGAN 7 115.0 1
				89.91	5.71			615348 GRE-MCHENRY7115.0 659113 VOLTAIR7 115.0 1	603023 MALLARD7 115.0 659165 RUTHVILLECP7115.0 1
				89.66	5.96	90.75	6.42	615348 GRE-MCHENRY7115.0 659113 VOLTAIR7 115.0 1	652440 NELSON 7 115.0 652449 MAX 7 115.0 1
				89.69	5.93	90.78	6.39	615348 GRE-MCHENRY7115.0 659113 VOLTAIR7 115.0 1	652440 NELSON 7 115.0 659155 LOGAN 7 115.0 1
		85.89	8.96					652440 NELSON 7 115.0 652449 MAX 7 115.0 1	615347-615348-615349 GRE-MCHENRY4 230/115/12 1
				89.68	5.94	90.76	6.41	652440 NELSON 7 115.0 652449 MAX 7 115.0 1	615348 GRE-MCHENRY7115.0 659113 VOLTAIR7 115.0 1
				89.71	5.91	90.78	6.38	652440 NELSON 7 115.0 659155 LOGAN 7 115.0 1	615348 GRE-MCHENRY7115.0 659113 VOLTAIR7 115.0 1
659155 LOGAN 7	115.0	96.23		98.58				SYSTEM INTACT	
		87.15	9.08					605634 VELVA TAP 115.0 615348 GRE-MCHENRY7115.0 1	603023 MALLARD7 115.0 652440 NELSON 7 115.0 1
		87.24	8.99					605634 VELVA TAP 115.0 615348 GRE-MCHENRY7115.0 1	652440 NELSON 7 115.0 652449 MAX 7 115.0 1
		87.87	8.36					615347-615348-615349 GRE-MCHENRY4 230/115/12 1	603023 MALLARD7 115.0 652440 NELSON 7 115.0 1
		87.91	8.32					615347-615348-615349 GRE-MCHENRY4 230/115/12 1	652440 NELSON 7 115.0 652449 MAX 7 115.0 1
		87.05	9.18					652440 NELSON 7 115.0 652449 MAX 7 115.0 1	603022 SOURIS 7 115.0 605634 VELVA TAP 115.0 1
		87.24	8.99					652440 NELSON 7 115.0 652449 MAX 7 115.0 1	605634 VELVA TAP 115.0 615348 GRE-MCHENRY7115.0 1
		87.91	8.32					652440 NELSON 7 115.0 652449 MAX 7 115.0 1	615347-615348-615349 GRE-MCHENRY4 230/115/12 1
		87.04	9.19					652440 NELSON 7 115.0 652449 MAX 7 115.0 1	CONTINGENCY B2.SOR-VEL-MCH

659165 RUTHVILLECP7	115.0	92.54		96.79		100.52	SYSTEM INTACT		
				88.31	8.49		603022 SOURIS 7 115.0 603270 WARD CO 115.0 1	603022 SOURIS 7 115.0 603270 WARD CO 115.0 2	
		70.5	22.04				603023 MALLARD7 115.0 659155 LOGAN 7 115.0 1	603022 SOURIS 7 115.0 603023 MALLARD7 115.0 1	
		76.12	16.42				603023 MALLARD7 115.0 659155 LOGAN 7 115.0 1	652453 TOWNER 7 115.0 652464 DENBIGH TAP7115.0 1	
		75.72	16.82				603023 MALLARD7 115.0 659155 LOGAN 7 115.0 1	652464 DENBIGH TAP7115.0 659113 VOLTAIR7 115.0 1	
		75.66	16.88				603023 MALLARD7 115.0 659155 LOGAN 7 115.0 1	659155 LOGAN 7 115.0 659307 SWMINOT CP7115.0 1	
		76.17	16.37				603023 MALLARD7 115.0 659155 LOGAN 7 115.0 1	659261 BTHOLD 7 115.0 659307 SWMINOT CP7115.0 1	
		75.67	16.87				652464 DENBIGH TAP7115.0 659113 VOLTAIR7 115.0 1	603023 MALLARD7 115.0 659155 LOGAN 7 115.0 1	
		75.71	16.83				659155 LOGAN 7 115.0 659307 SWMINOT CP7115.0 1	603023 MALLARD7 115.0 659155 LOGAN 7 115.0 1	
659166 DUNNING7	115.0	91.16		95.95		100.12	SYSTEM INTACT		
				86.34	9.61		603022 SOURIS 7 115.0 603270 WARD CO 115.0 1	603022 SOURIS 7 115.0 603270 WARD CO 115.0 2	
		65.39	25.77				603023 MALLARD7 115.0 659155 LOGAN 7 115.0 1	603022 SOURIS 7 115.0 603023 MALLARD7 115.0 1	
		72.1	19.06				603023 MALLARD7 115.0 659155 LOGAN 7 115.0 1	652453 TOWNER 7 115.0 652464 DENBIGH TAP7115.0 1	
		71.61	19.55				603023 MALLARD7 115.0 659155 LOGAN 7 115.0 1	652464 DENBIGH TAP7115.0 659113 VOLTAIR7 115.0 1	
		71.54	19.62				603023 MALLARD7 115.0 659155 LOGAN 7 115.0 1	659155 LOGAN 7 115.0 659307 SWMINOT CP7115.0 1	
		72.16	19				603023 MALLARD7 115.0 659155 LOGAN 7 115.0 1	659261 BTHOLD 7 115.0 659307 SWMINOT CP7115.0 1	
		71.55	19.61				652464 DENBIGH TAP7115.0 659113 VOLTAIR7 115.0 1	603023 MALLARD7 115.0 659155 LOGAN 7 115.0 1	
		71.6	19.56				659155 LOGAN 7 115.0 659307 SWMINOT CP7115.0 1	603023 MALLARD7 115.0 659155 LOGAN 7 115.0 1	
659190 NDPRAIRWND 7	115.0	95.05		98.53			SYSTEM INTACT		
				90.84	7.69		603023 MALLARD7 115.0 603270 WARD CO 115.0 1	CONTINGENCY Souris - Ward Co double	
		76.78	18.27				603023 MALLARD7 115.0 659155 LOGAN 7 115.0 1	603022 SOURIS 7 115.0 603023 MALLARD7 115.0 1	

		80.95	14.11					603023 MALLARD7 115.0 659155 LOGAN 7 115.0 1	652453 TOWNER 7 115.0 652464 DENBIGH TAP7115.0 1
		80.63	14.42					603023 MALLARD7 115.0 659155 LOGAN 7 115.0 1	652464 DENBIGH TAP7115.0 659113 VOLTAIR7 115.0 1
		80.46	14.59					603023 MALLARD7 115.0 659155 LOGAN 7 115.0 1	659155 LOGAN 7 115.0 659307 SWMINOT CP7115.0 1
		80.92	14.13					603023 MALLARD7 115.0 659155 LOGAN 7 115.0 1	659261 BTHOLD 7 115.0 659307 SWMINOT CP7115.0 1
		80.59	14.47					652464 DENBIGH TAP7115.0 659113 VOLTAIR7 115.0 1	603023 MALLARD7 115.0 659155 LOGAN 7 115.0 1
		80.5	14.55					659155 LOGAN 7 115.0 659307 SWMINOT CP7115.0 1	603023 MALLARD7 115.0 659155 LOGAN 7 115.0 1
659261 BTHOLD 7	115.0	94.51		96.08		97.64		SYSTEM INTACT	
				89.22	6.86	90.65	6.99	602052 WARD CO 230.0 615347 GRE-MCHENRY4230.0 1	659155 LOGAN 7 115.0 659307 SWMINOT CP7115.0 1
						90.65	6.99	602052 WARD CO 230.0 659108 LOGAN 4 230.0 1	659155 LOGAN 7 115.0 659307 SWMINOT CP7115.0 1
				89.44	6.64	90.76	6.88	603023 MALLARD7 115.0 659165 RUTHVILLECP7115.0 1	659155 LOGAN 7 115.0 659307 SWMINOT CP7115.0 1
		87.79	6.71					605634 VELVA TAP 115.0 615348 GRE-MCHENRY7115.0 1	659155 LOGAN 7 115.0 659307 SWMINOT CP7115.0 1
		86.85	7.66			90.78	6.86	615347-615348-615349 GRE-MCHENRY4 230/115/12 1	659155 LOGAN 7 115.0 659307 SWMINOT CP7115.0 1
		87.94	6.57	89.51	6.57			652440 NELSON 7 115.0 652449 MAX 7 115.0 1	659155 LOGAN 7 115.0 659307 SWMINOT CP7115.0 1
				89.52	6.56			652440 NELSON 7 115.0 659155 LOGAN 7 115.0 1	659155 LOGAN 7 115.0 659307 SWMINOT CP7115.0 1
				89.23	6.85	90.66	6.98	659155 LOGAN 7 115.0 659307 SWMINOT CP7115.0 1	602052 WARD CO 230.0 615347 GRE-MCHENRY4230.0 1
						90.65	6.99	659155 LOGAN 7 115.0 659307 SWMINOT CP7115.0 1	602052 WARD CO 230.0 659108 LOGAN 4 230.0 1
		87.4	7.11					659155 LOGAN 7 115.0 659307 SWMINOT CP7115.0 1	603022 SOURIS 7 115.0 605634 VELVA TAP 115.0 1
		87.6	6.9					659155 LOGAN 7 115.0 659307 SWMINOT CP7115.0 1	603023 MALLARD7 115.0 652440 NELSON 7 115.0 1
				89.44	6.64	90.76	6.88	659155 LOGAN 7 115.0 659307 SWMINOT CP7115.0 1	603023 MALLARD7 115.0 659165 RUTHVILLECP7115.0 1
		87.45	7.06					659155 LOGAN 7 115.0 659307 SWMINOT CP7115.0 1	605634 VELVA TAP 115.0 615348 GRE-MCHENRY7115.0 1
		86.88	7.62					659155 LOGAN 7 115.0 659307 SWMINOT CP7115.0 1	615347-615348-615349 GRE-MCHENRY4 230/115/12 1

		87.6	6.91	89.51	6.57			659155 LOGAN 7 115.0 659307 SWMINOT CP7115.0 1	652440 NELSON 7 115.0 652449 MAX 7 115.0 1
				89.53	6.55			659155 LOGAN 7 115.0 659307 SWMINOT CP7115.0 1	652440 NELSON 7 115.0 659155 LOGAN 7 115.0 1
659307 SWMINOT CP7	115.0	95.33		97.51		99.62		SYSTEM INTACT	
				86.14	11.37	87.68	11.94	602052 WARD CO 230.0 615347 GRE-MCHENRY4230.0 1	659155 LOGAN 7 115.0 659307 SWMINOT CP7115.0 1
						87.68	11.94	602052 WARD CO 230.0 659108 LOGAN 4 230.0 1	659155 LOGAN 7 115.0 659307 SWMINOT CP7115.0 1
				86.37	11.14	87.8	11.82	603023 MALLARD7 115.0 659165 RUTHVILLECP7115.0 1	659155 LOGAN 7 115.0 659307 SWMINOT CP7115.0 1
		84.59	10.73					605634 VELVA TAP 115.0 615348 GRE-MCHENRY7115.0 1	659155 LOGAN 7 115.0 659307 SWMINOT CP7115.0 1
		83.57	11.75			87.82	11.8	615347-615348-615349 GRE-MCHENRY4 230/115/12 1	659155 LOGAN 7 115.0 659307 SWMINOT CP7115.0 1
		84.75	10.57	86.44	11.07			652440 NELSON 7 115.0 652449 MAX 7 115.0 1	659155 LOGAN 7 115.0 659307 SWMINOT CP7115.0 1
				86.46	11.05			652440 NELSON 7 115.0 659155 LOGAN 7 115.0 1	659155 LOGAN 7 115.0 659307 SWMINOT CP7115.0 1
				86.15	11.36	87.69	11.93	659155 LOGAN 7 115.0 659307 SWMINOT CP7115.0 1	602052 WARD CO 230.0 615347 GRE-MCHENRY4230.0 1
						87.68	11.94	659155 LOGAN 7 115.0 659307 SWMINOT CP7115.0 1	602052 WARD CO 230.0 659108 LOGAN 4 230.0 1
		84.17	11.16					659155 LOGAN 7 115.0 659307 SWMINOT CP7115.0 1	603022 SOURIS 7 115.0 605634 VELVA TAP 115.0 1
		84.39	10.94					659155 LOGAN 7 115.0 659307 SWMINOT CP7115.0 1	603023 MALLARD7 115.0 652440 NELSON 7 115.0 1
				86.37	11.14	87.8	11.82	659155 LOGAN 7 115.0 659307 SWMINOT CP7115.0 1	603023 MALLARD7 115.0 659165 RUTHVILLECP7115.0 1
		84.22	11.1					659155 LOGAN 7 115.0 659307 SWMINOT CP7115.0 1	605634 VELVA TAP 115.0 615348 GRE-MCHENRY7115.0 1
		83.61	11.72					659155 LOGAN 7 115.0 659307 SWMINOT CP7115.0 1	615347-615348-615349 GRE-MCHENRY4 230/115/12 1
		84.39	10.94	86.45	11.06			659155 LOGAN 7 115.0 659307 SWMINOT CP7115.0 1	652440 NELSON 7 115.0 652449 MAX 7 115.0 1
				86.47	11.04			659155 LOGAN 7 115.0 659307 SWMINOT CP7115.0 1	652440 NELSON 7 115.0 659155 LOGAN 7 115.0 1
		84.16	11.16					659155 LOGAN 7 115.0 659307 SWMINOT CP7115.0 1	CONTINGENCY B2.SOR-VEL-MCH
659308 KENASTON 7	115.0	93.37		94.78		96.16		SYSTEM INTACT	

			88.54	6.24	89.84	6.33	602052 WARD CO 230.0 615347 GRE-MCHENRY4230.0 1	659155 LOGAN 7 115.0 659307 SWMINOT CP7115.0 1
					89.88	6.28	602052 WARD CO 230.0 659108 LOGAN 4 230.0 1	659155 LOGAN 7 115.0 659307 SWMINOT CP7115.0 1
			88.71	6.07	89.94	6.22	603023 MALLARD7 115.0 659165 RUTHVILLECP7115.0 1	659155 LOGAN 7 115.0 659307 SWMINOT CP7115.0 1
	87.27	6.1					605634 VELVA TAP 115.0 615348 GRE-MCHENRY7115.0 1	659155 LOGAN 7 115.0 659307 SWMINOT CP7115.0 1
	86.38	6.99					615347-615348-615349 GRE-MCHENRY4 230/115/12 1	659155 LOGAN 7 115.0 659307 SWMINOT CP7115.0 1
	87.4	5.97	88.75	6.03	89.95	6.22	652440 NELSON 7 115.0 652449 MAX 7 115.0 1	659155 LOGAN 7 115.0 659307 SWMINOT CP7115.0 1
			88.77	6.02			652440 NELSON 7 115.0 659155 LOGAN 7 115.0 1	659155 LOGAN 7 115.0 659307 SWMINOT CP7115.0 1
			88.55	6.23	89.84	6.32	659155 LOGAN 7 115.0 659307 SWMINOT CP7115.0 1	602052 WARD CO 230.0 615347 GRE-MCHENRY4230.0 1
					89.88	6.28	659155 LOGAN 7 115.0 659307 SWMINOT CP7115.0 1	602052 WARD CO 230.0 659108 LOGAN 4 230.0 1
	86.87	6.5					659155 LOGAN 7 115.0 659307 SWMINOT CP7115.0 1	603022 SOURIS 7 115.0 605634 VELVA TAP 115.0 1
	87.04	6.32					659155 LOGAN 7 115.0 659307 SWMINOT CP7115.0 1	603023 MALLARD7 115.0 652440 NELSON 7 115.0 1
			88.71	6.07	89.94	6.22	659155 LOGAN 7 115.0 659307 SWMINOT CP7115.0 1	603023 MALLARD7 115.0 659165 RUTHVILLECP7115.0 1
	86.91	6.45					659155 LOGAN 7 115.0 659307 SWMINOT CP7115.0 1	605634 VELVA TAP 115.0 615348 GRE-MCHENRY7115.0 1
	86.41	6.95					659155 LOGAN 7 115.0 659307 SWMINOT CP7115.0 1	615347-615348-615349 GRE-MCHENRY4 230/115/12 1
	87.04	6.32	88.76	6.02	89.95	6.21	659155 LOGAN 7 115.0 659307 SWMINOT CP7115.0 1	652440 NELSON 7 115.0 652449 MAX 7 115.0 1
			88.78	6.01			659155 LOGAN 7 115.0 659307 SWMINOT CP7115.0 1	652440 NELSON 7 115.0 659155 LOGAN 7 115.0 1
	86.86	6.5					659155 LOGAN 7 115.0 659307 SWMINOT CP7115.0 1	CONTINGENCY B2.SOR-VEL-MCH

Appendix D: Powerflow Diagrams & Log sheets.

Base Case

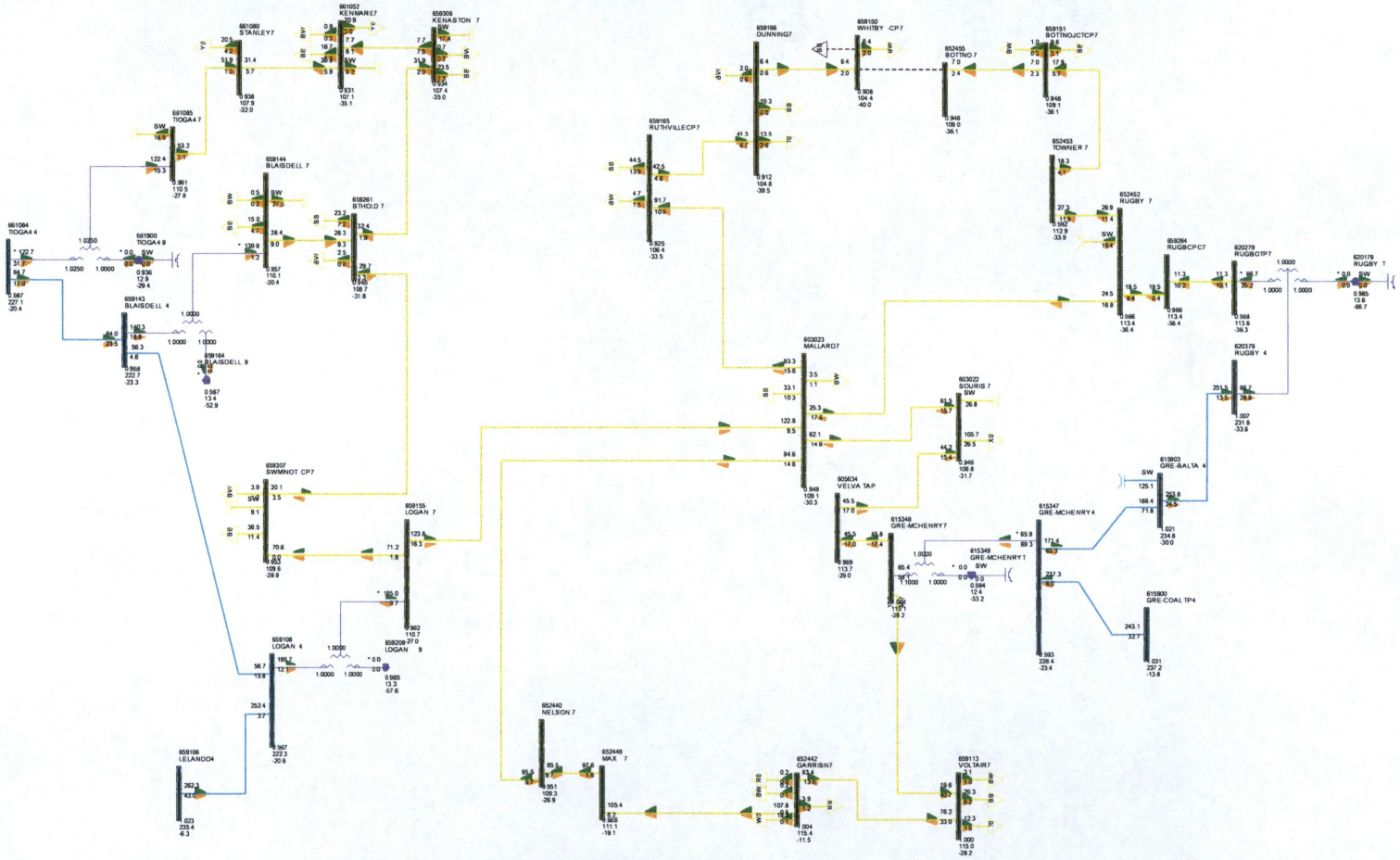

Option A

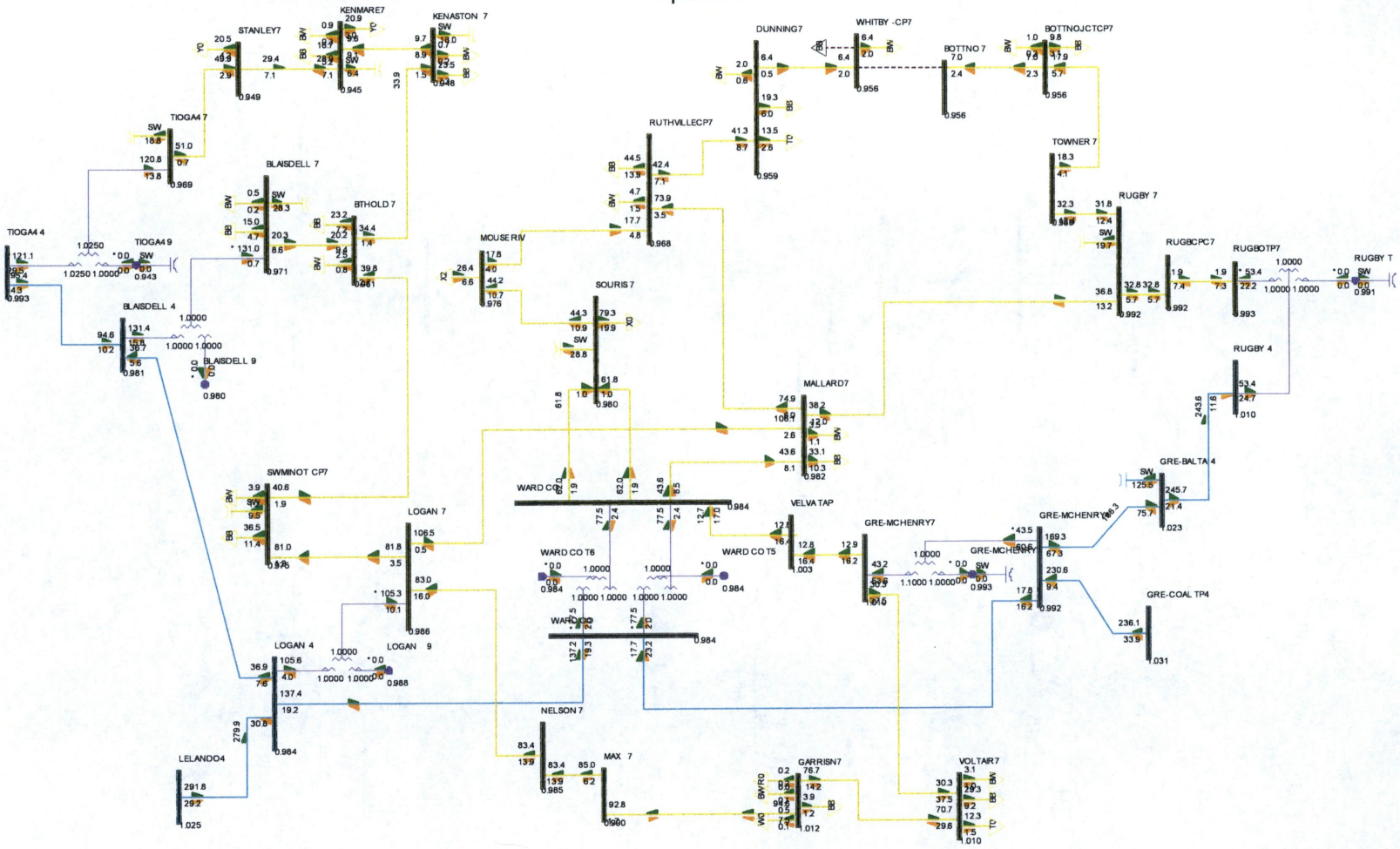
STANLEY7
KENMARE7
KENASTON 7
DUNNING7
WHITBY -CP7
BOTTNO 7
BOTTNOJCTCP7
TIOGA4 7
RUTHVILLECP7
TOWNER 7
BLAISDELL 7
BTHOLD 7
RUGBY 7
TIOGA4 4
TIOGA4 9
MOUSE RIV
RUGBCPC7
RUGBOTP7
RUGBY T
SOURIS 7
BLAISDELL 4
BLAISDELL 9
RUGBY 4
MALLARD7
SWMINOT CP7
WARD CO
GRE-BALTA 4
LOGAN 7
VELVA TAP
GRE-MCHENRY7
GRE-MCHENRY
WARD CO T6
WARD CO T5
GRE-COAL TP4
LOGAN 4
LOGAN 9
NELSON 7
LELANDO4
MAX 7
GARRISN7
VOLTAIR7

Option B

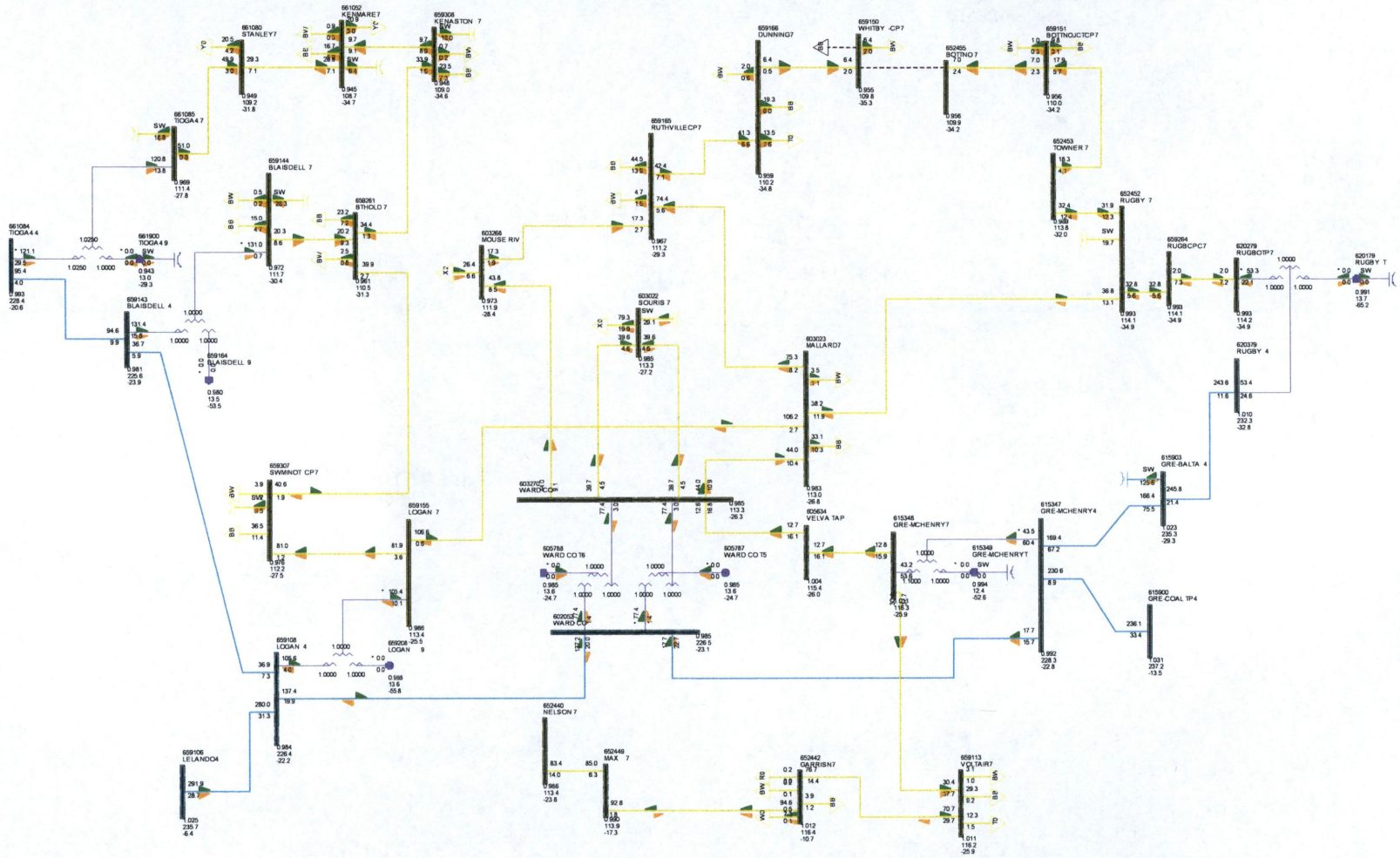
661052 KENMARE7
659308 KENASTON 7
661080 STANLEY7
661085 TIOGA4 7
661084 TIOGA4 4
661900 TIOGA4 9
659144 BLAISDELL 7
659261 BTHOLD 7
659143 BLAISDELL 4
659164 BLAISDELL 9
659166 DUNNING7
659150 WHITBY -CP7
652455 BOTINO7 7
659151 BOTINOJCTCP7
659165 RUTHVILLECP7
652453 TOWNER 7
652452 RUGBY 7
659264 RUGBCPC7
620279 RUGBOTP7
620179 RUGBY T
620379 RUGBY 4
603366 MOUSE RIV
603022 SOURIS 7
603023 MALLARD7
659307 SWMINOT CP7
659155 LOGAN 7
603270 WARDCOP
605788 WARD CO T6
605787 WARD CO T5
605634 VELVA TAP
615348 GRE-MCHENRY7
615349 GRE-MCHENRYT
615347 GRE-MCHENRY4
615903 GRE-BALTA 4
615900 GRE-COAL TP4
659108 LOGAN 4
659206 LOGAN 9
652440 NELSON 7
652449 MAX 7
652442 DARRISN7
659113 VOLTAIR7
659106 LELANDO4

Base Case Loss of Mallard – Souris 115 kV

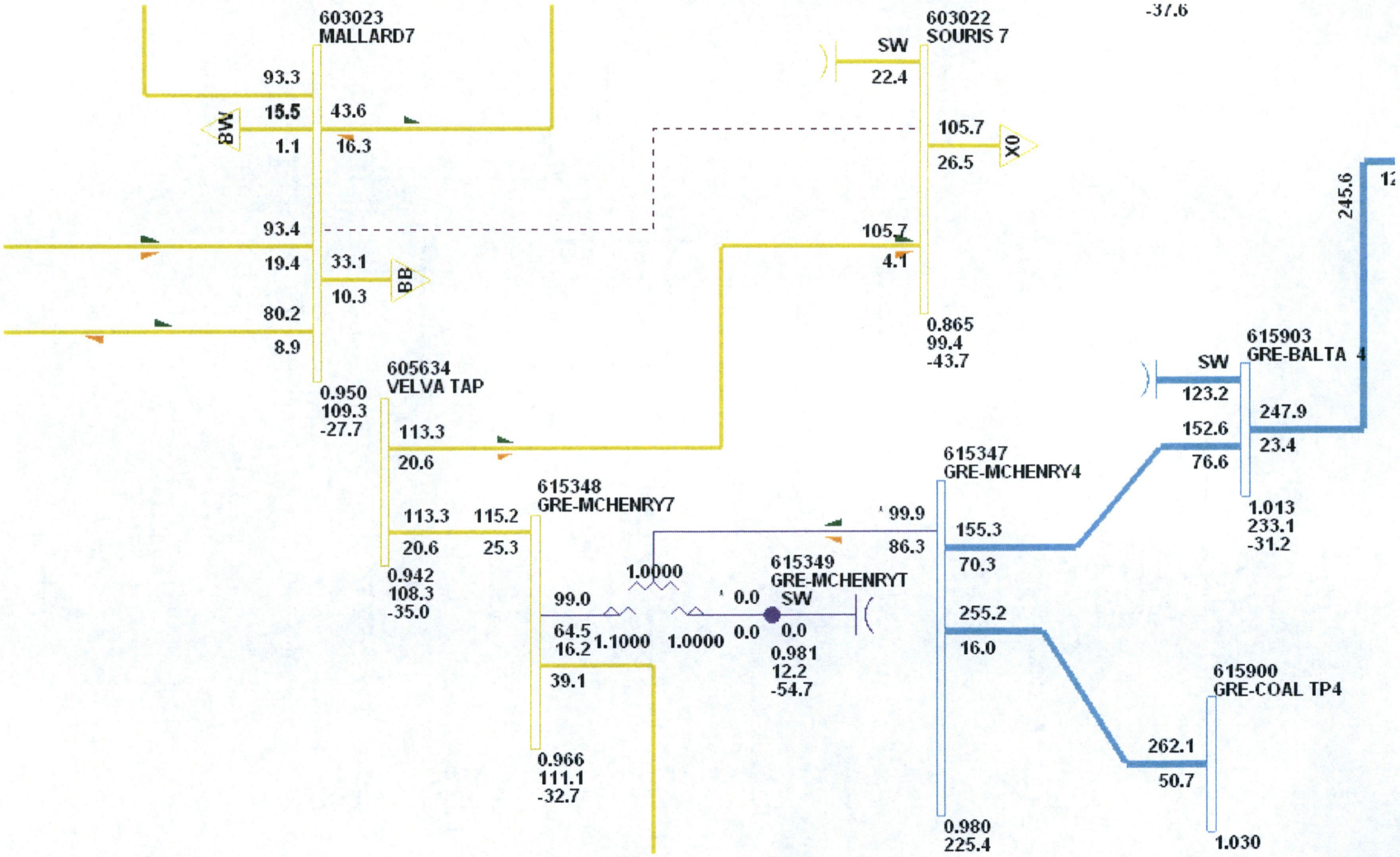

Base Case Loss of Leland Olds – Logan 230 kV

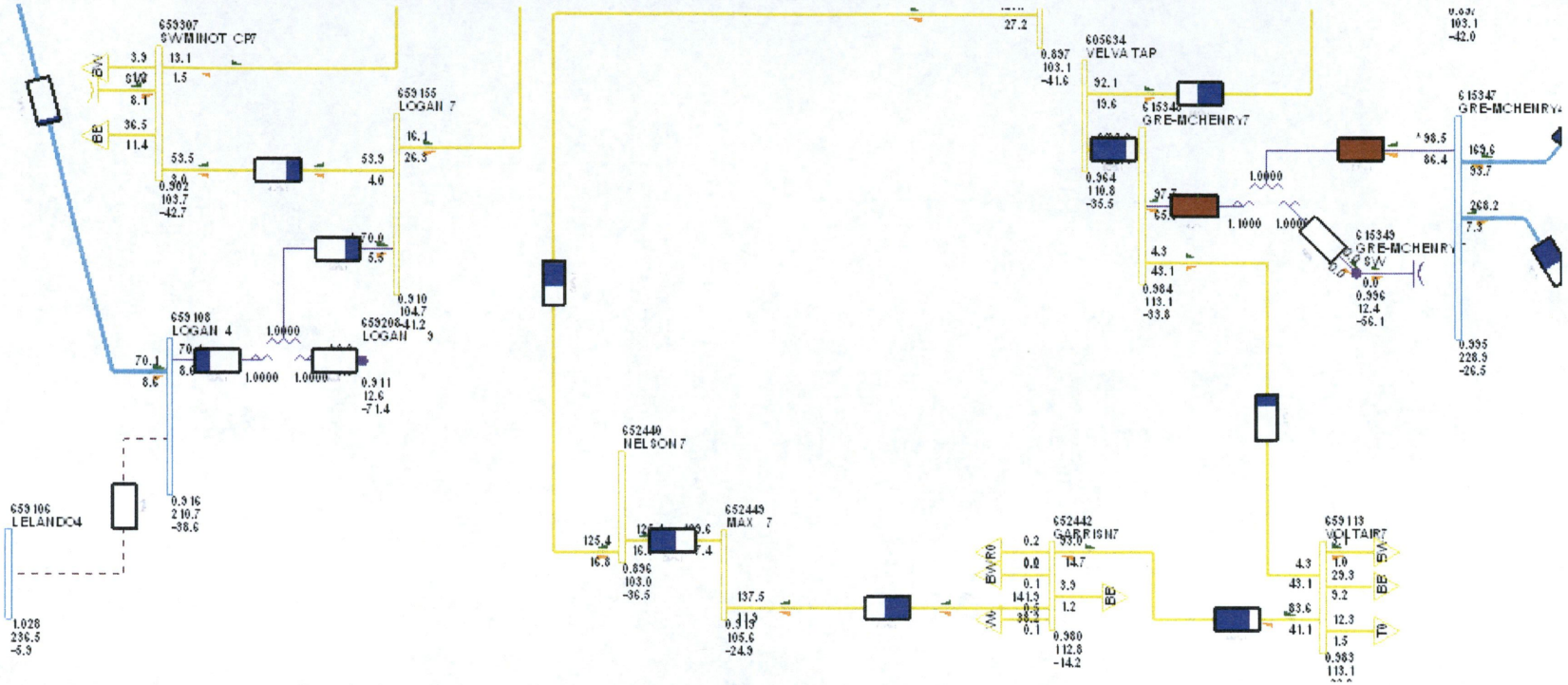

Option A Loss of Ward County – Souris 115 kV

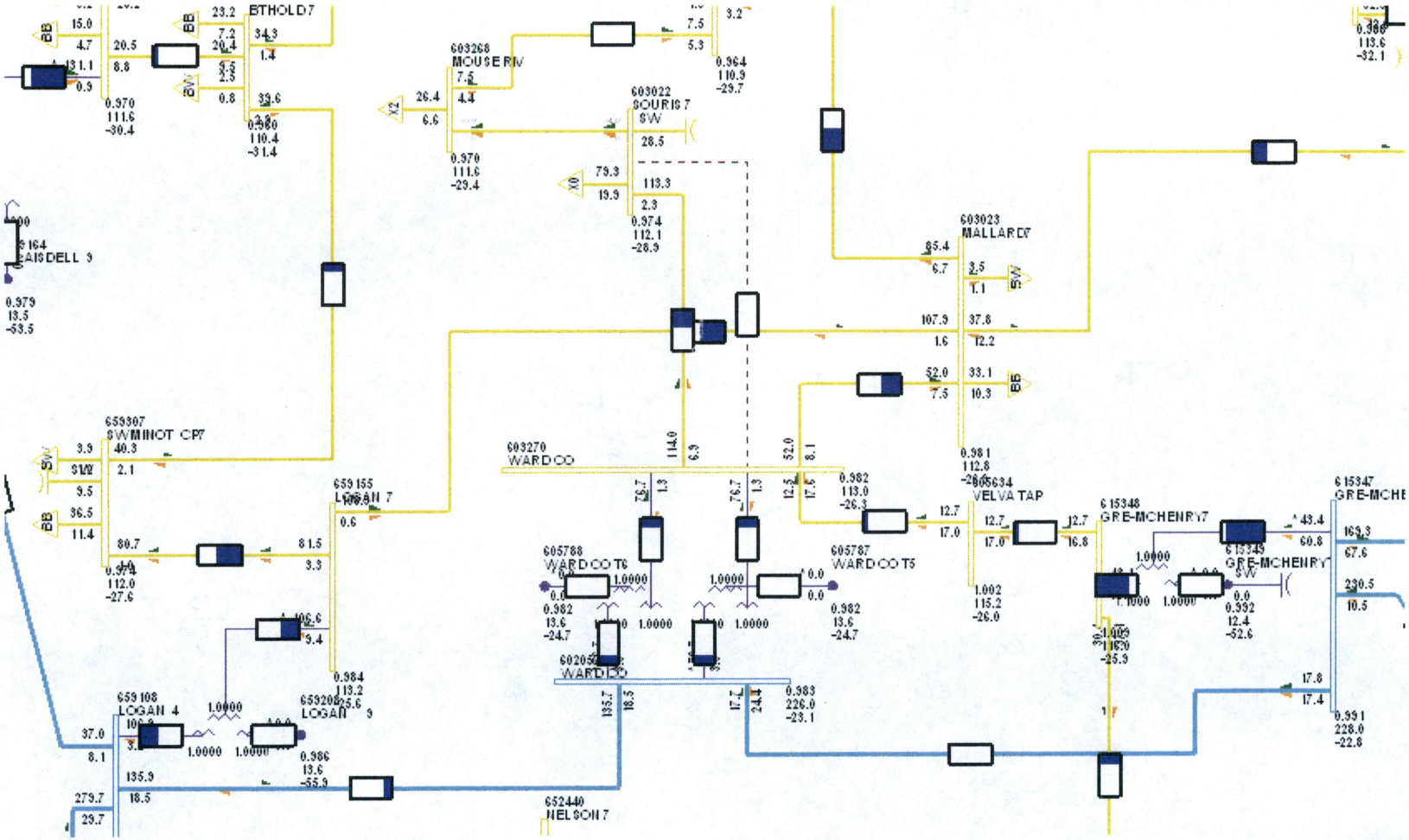

Option A Loss of Leland Olds – Logan 230 kV

Option

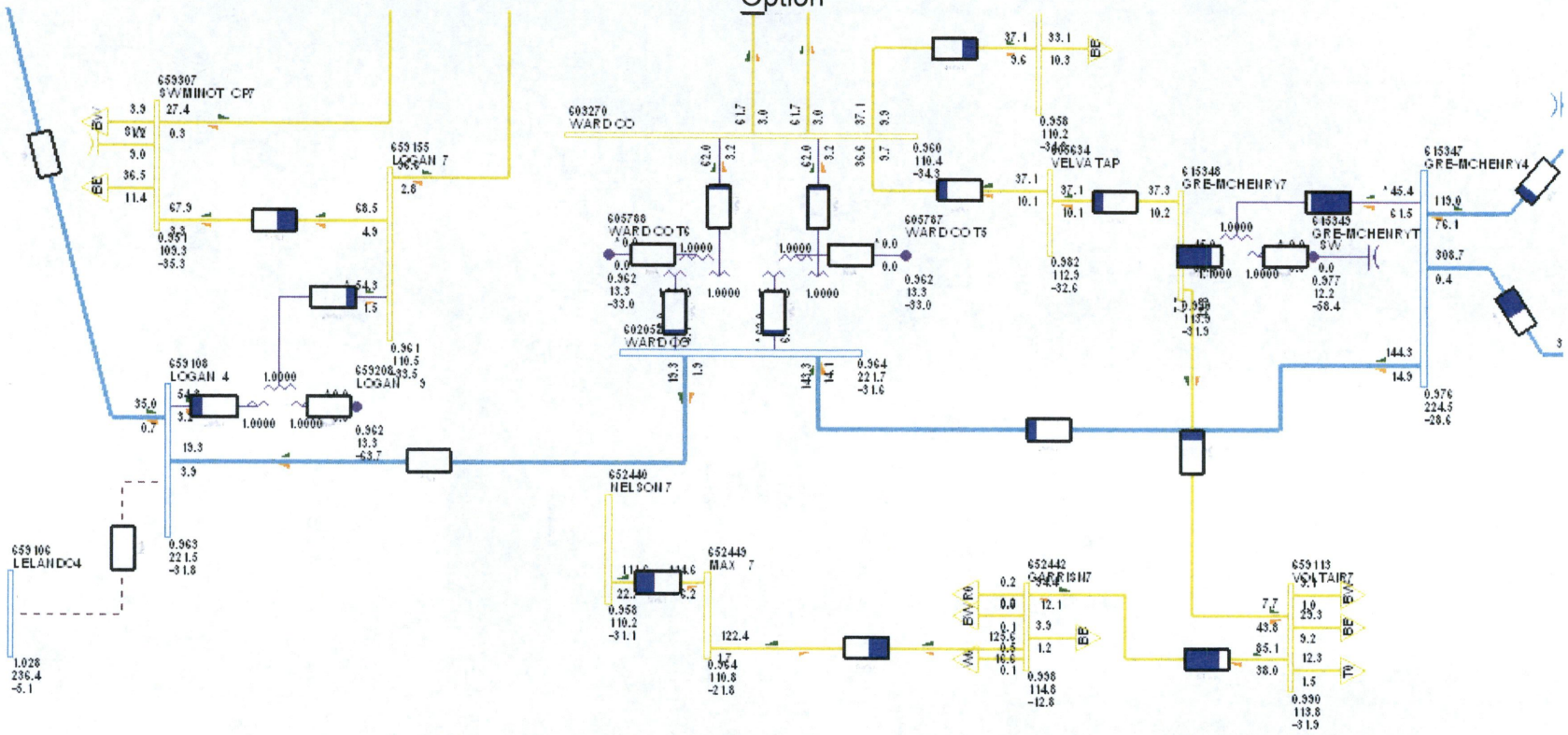

Option B Loss of Ward County – Souris 115 kV

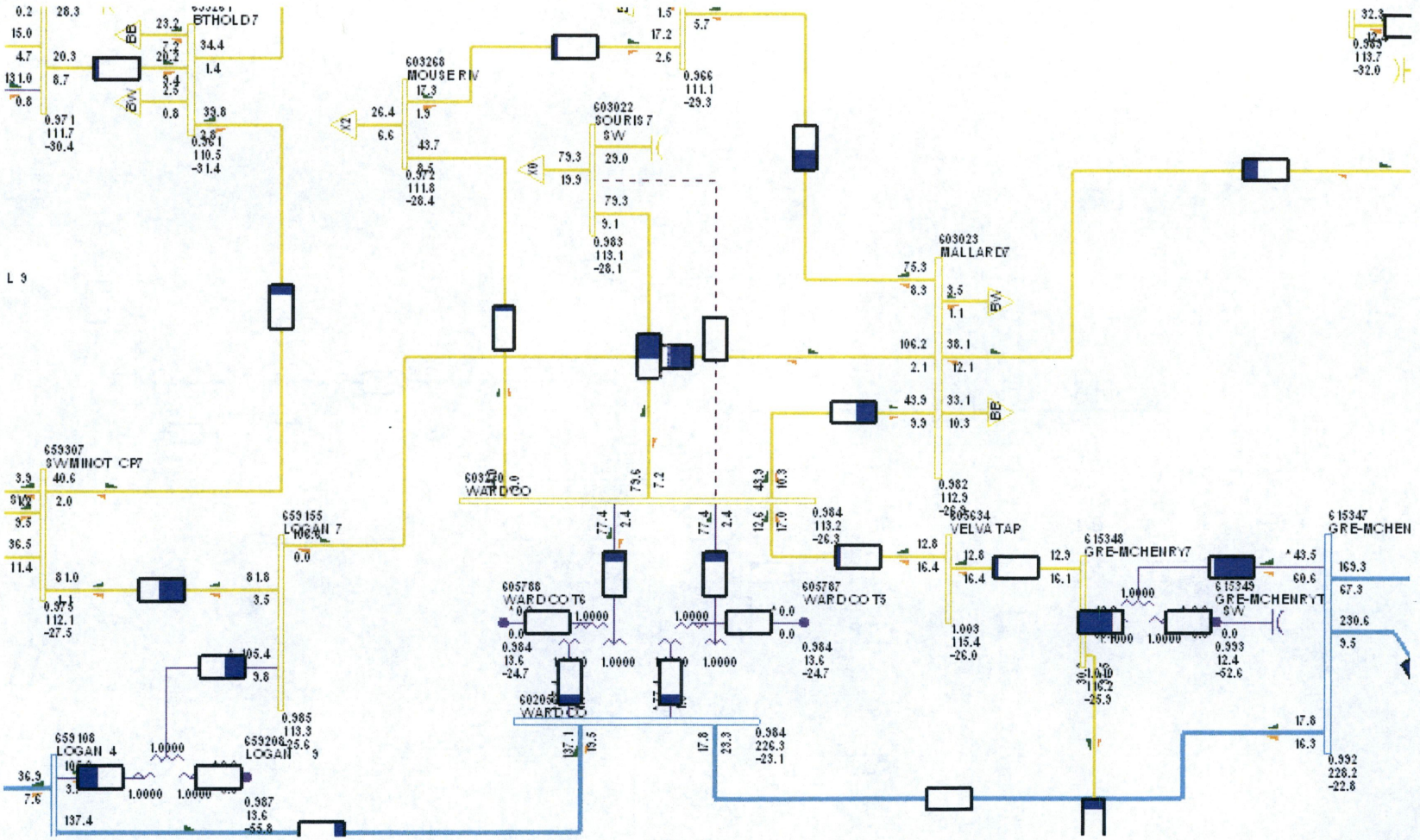

Option B Loss of Leland Olds – Logan 230 kV

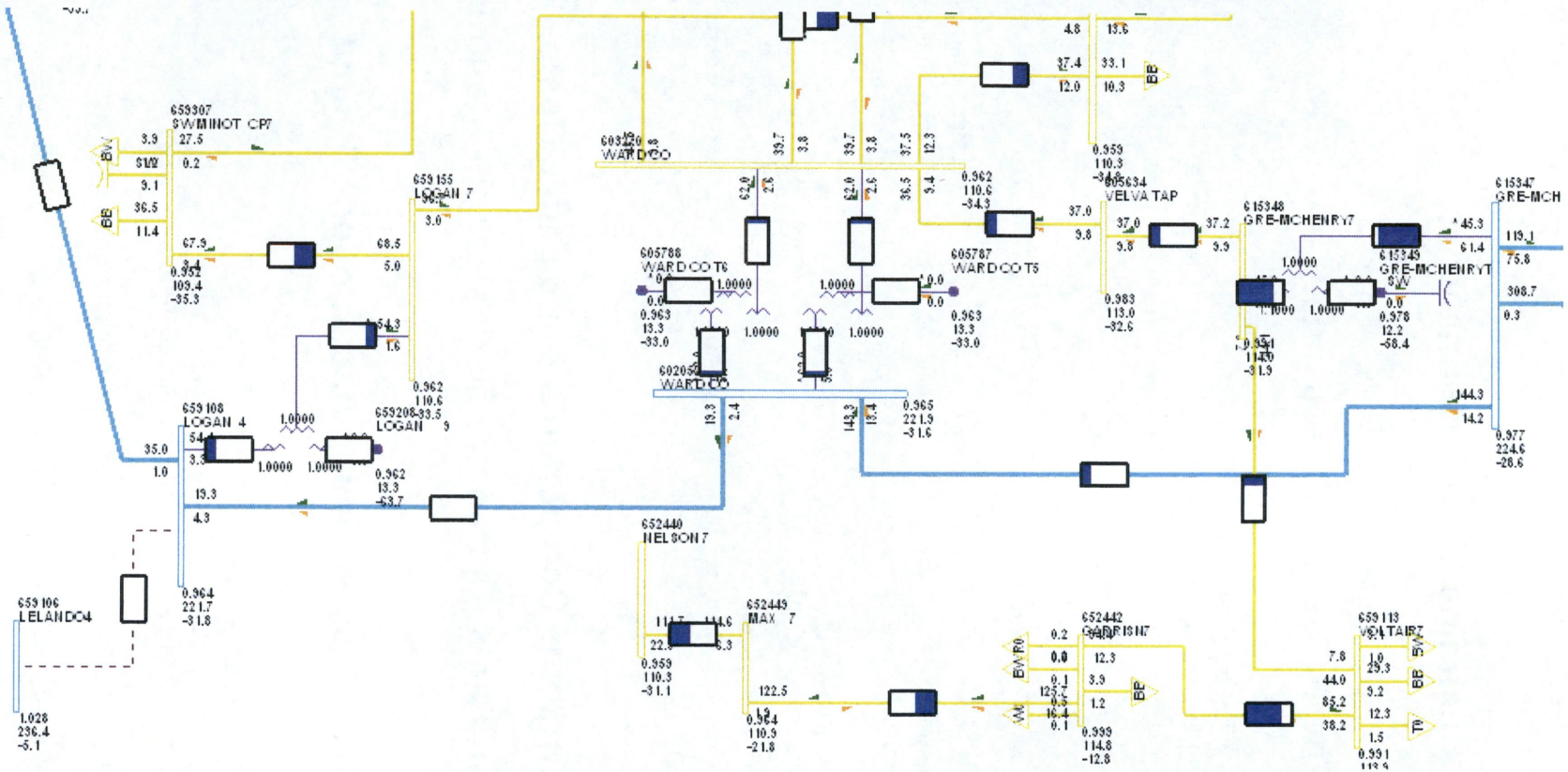

Appendix E: Constrained Interface Analysis.

Not Applicable

Appendix F: Power System Losses data.

```
Base Model
PTI INTERACTIVE POWER SYSTEM SIMULATOR--PSS®E      WED, OCT 30 2013   9:36
M000-WP24AA.SAV;WINTER;PK LD;SYSTEM INTACT           :              AREA TOTALS
ND=-296,MH=810,MW=708,OHMH=0,OHMP=0,EWTW=206,BD=-65                  IN MW/MVAR
                 FROM  TO LOAD              TO                              -NET INTERCHANGE-
               GENE-  AT AREA   TO BUS  GNE BUS  TO LINE     FROM     TO     TO TIE  TO TIES
DESIRED
X-- AREA --X  RATION    BUSES    SHUNT  DEVICES    SHUNT CHARGING   LOSSES    LINES  + LOADS  NET IN
             637727.6 621687.0     -2.6      0.0    227.6      0.0  15815.6      0.0      0.0
113.3

Option 1
PTI INTERACTIVE POWER SYSTEM SIMULATOR--PSS®E      WED, OCT 30 2013   9:40
M001-WP24AA.SAV;WINTER;PK LD;SYSTEM INTACT           :              AREA TOTALS
ND=-293,MH=811,MW=709,OHMH=0,OHMP=0,EWTW=206,BD=-67                  IN MW/MVAR
                 FROM  TO LOAD              TO                              -NET INTERCHANGE-
               GENE-  AT AREA   TO BUS  GNE BUS  TO LINE     FROM     TO     TO TIE  TO TIES
DESIRED
X-- AREA --X  RATION    BUSES    SHUNT  DEVICES    SHUNT CHARGING   LOSSES    LINES  + LOADS  NET
INT
             637722.2 621686.9     -2.6      0.0    227.6      0.0  15810.2      0.0      0.0
113.3

Option 2
PTI INTERACTIVE POWER SYSTEM SIMULATOR--PSS®E      WED, OCT 30 2013  10:52
M002-WP24AA.SAV;WINTER;PK LD;SYSTEM INTACT           :              AREA TOTALS
ND=-292,MH=811,MW=709,OHMH=0,OHMP=0,EWTW=206,BD=-67                  IN MW/MVAR
                 FROM  TO LOAD              TO                              -NET INTERCHANGE-
               GENE-  AT AREA   TO BUS  GNE BUS  TO LINE     FROM     TO     TO TIE  TO TIES
DESIRED
X-- AREA --X  RATION    BUSES    SHUNT  DEVICES    SHUNT CHARGING   LOSSES    LINES  + LOADS  NET
INT
             637722.4 621686.9     -2.6      0.0    227.6      0.0  15810.4      0.0      0.0
113.3
```

Appendix G: Options' Components & Indicative Costs.

Appendix H: Incremental transfer analysis input & output.

Not Applicable

Appendix I: Base Case Modeling Assumptions & Input Parameters.

Base Case Modeling Assumptions

- Added the 30 Mvars of capacitors at Souris substation
- Total NSP load of 109 MVA (2024) with .97 powerfactor
- Turned off the Velva, ND Prairie Wind, and Rugby wind farms

- Removed the Logan to Whitby 230 kV project and associated load
- Set B10T to 65 MW's north
- A third model was created using the MRO 2024 winter peak case with north transfers

Bulk Transmission Modeling Assumptions

25 mile McHenry – Ward Co 230 kV line (477 T-2 conductor assumed)

.00475 p.u. R .0355 p.u. X .075 p.u. B

517/568 MVA Normal/Emergency Rating

Ward County 230/115 kV transformers are 336 MVA with 7% impedance @200 MVA

Option A Modeling Assumptions

Souris – Ward County 115 kV lines rebuild using 477 T-2 conductor

.00518 p.u. R .03752 p.u. X .0056 p.u. B

258/284 MVA Normal/Emergency Rating

5 mile Souris – Mouse River 115 kV (477 T-2 conductor assumed)

.0037 p.u. R .0268 p.u. X .004 p.u. B

258/284 MVA Normal/Emergency Rating

NSP Minot Load split 75%/25% for Souris/Mouse River substations

Option B Modeling Assumptions

15 mile Ward County – Mouse River 115 kV (477 T-2 conductor assumed)

.0111 p.u. R .0804 p.u. X .012 p.u. B

258/284 MVA Normal/Emergency Rating